VR187 WITH NPD5200 SYSTEM DIAGRAM
RGB and NTSC Input

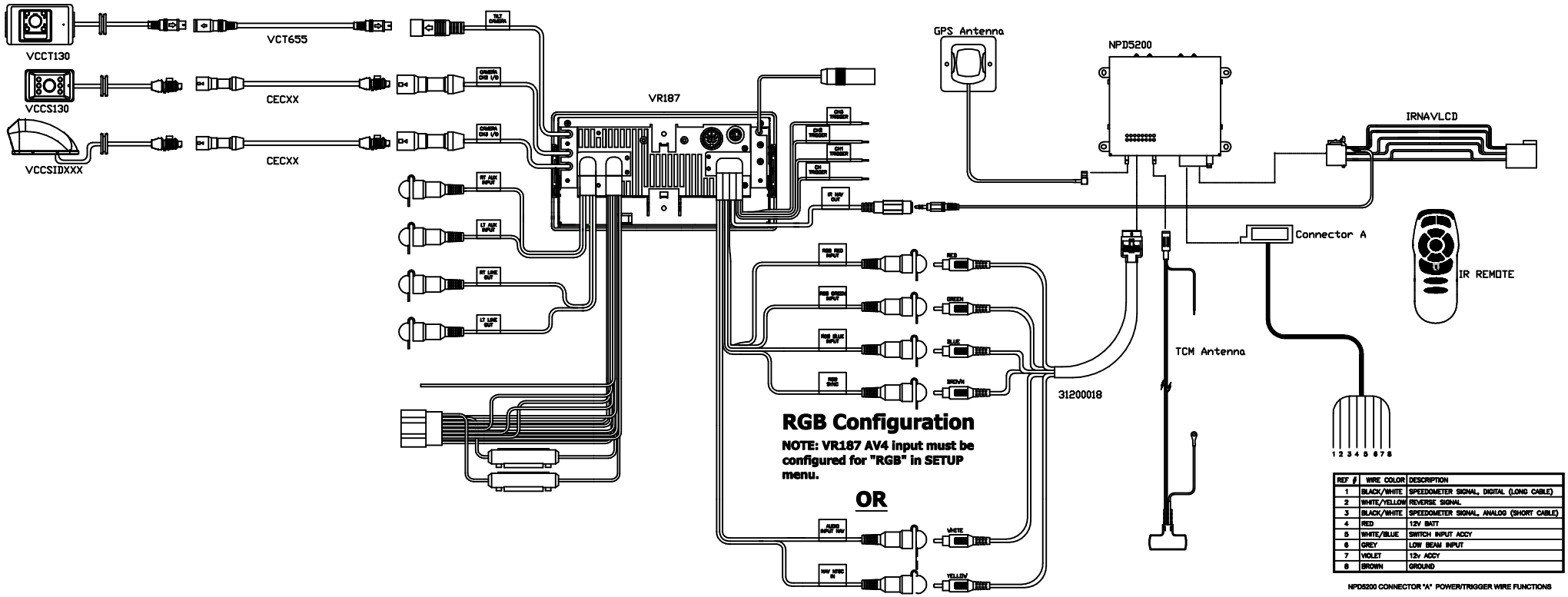

REF #	WIRE COLOR	DESCRIPTION
1	BLACK/WHITE	SPEEDOMETER SIGNAL, DIGITAL (LONG CABLE)
2	WHITE/YELLOW	REVERSE SIGNAL
3	BLACK/WHITE	SPEEDOMETER SIGNAL, ANALOG (SHORT CABLE)
4	RED	12V BATT
5	WHITE/BLUE	SWITCH INPUT ACCY
6	GREY	LOW BEAM INPUT
7	VIOLET	12v ACCY
8	BROWN	GROUND

NPD5200 CONNECTOR "A" POWER/TRIGGER WIRE FUNCTIONS

RGB Configuration

NOTE: VR187 AV4 input must be configured for "RGB" in SETUP menu.

OR

NTSC Configuration

NOTE: Connecting in this configuration replaces CA1255 (current version).

DB
ASA Electronics
For Reference Only
9-5-2007 Rev A