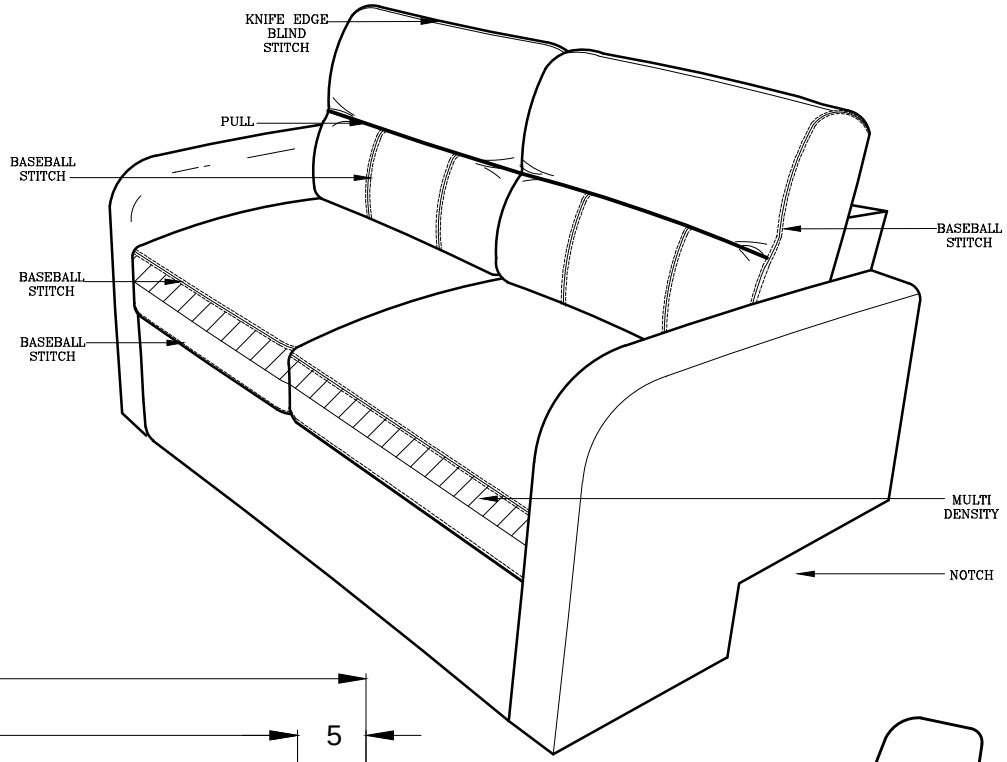

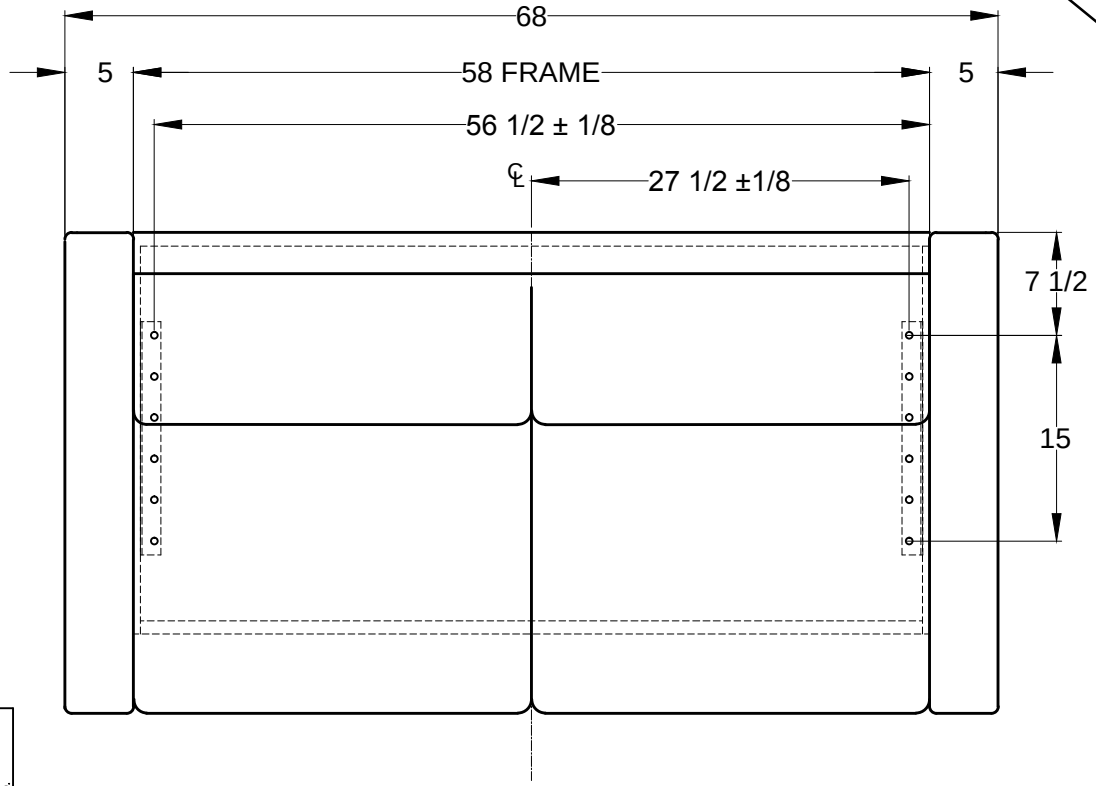

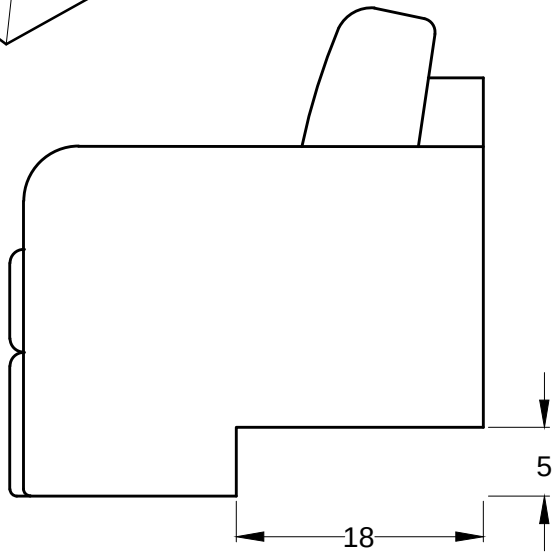

CF1000123-01
CF1000123-02
CF1000123-03
CF1000123-04
CF1000123-05
CF1000123-06
CF1000123-07
CF1000123-08
CF1000123-09
CF1000123-10

COMFORTFIT
BY VILLA INTERNATIONAL
13760 MIDWAY STREET
CERRITOS CA 90703
(562) 404-8111
FAX (562) 404-7781

SINE PATTERN: YES

UNLESS OTHERWISE SPECIFIED DIMENSIONS ARE IN INCHES

TOLERANCES:
DECIMALS
3 PLACE ± 0.005
2 PLACE ± 0.01
1 PLACE ± 0.1
FRACTIONS ± 1/16
ANGULAR ± 1°
DO NOT SCALE DRAWING

X
USED ON
NEXT ASSY

TITLE
FIRST TIME BUILD - CUSTOM NO NAILS - 68"
2015 MOUNTAIN AIRE NON-SLEEPER SOFA
2 CUSHION

DR V.GARCIA	11.3.14	SCALE 1:1	
CK		DWG. NO.	
APV		CF1000123	

THIS DRAWING IS THE PROPERTY OF VILLA INTERNATIONAL MFG ALL RIGHTS RESERVED.