CUT PATTERN	
BACK FRAME NO.	
BASE FRAME NO.	
WOOD PATTERN	

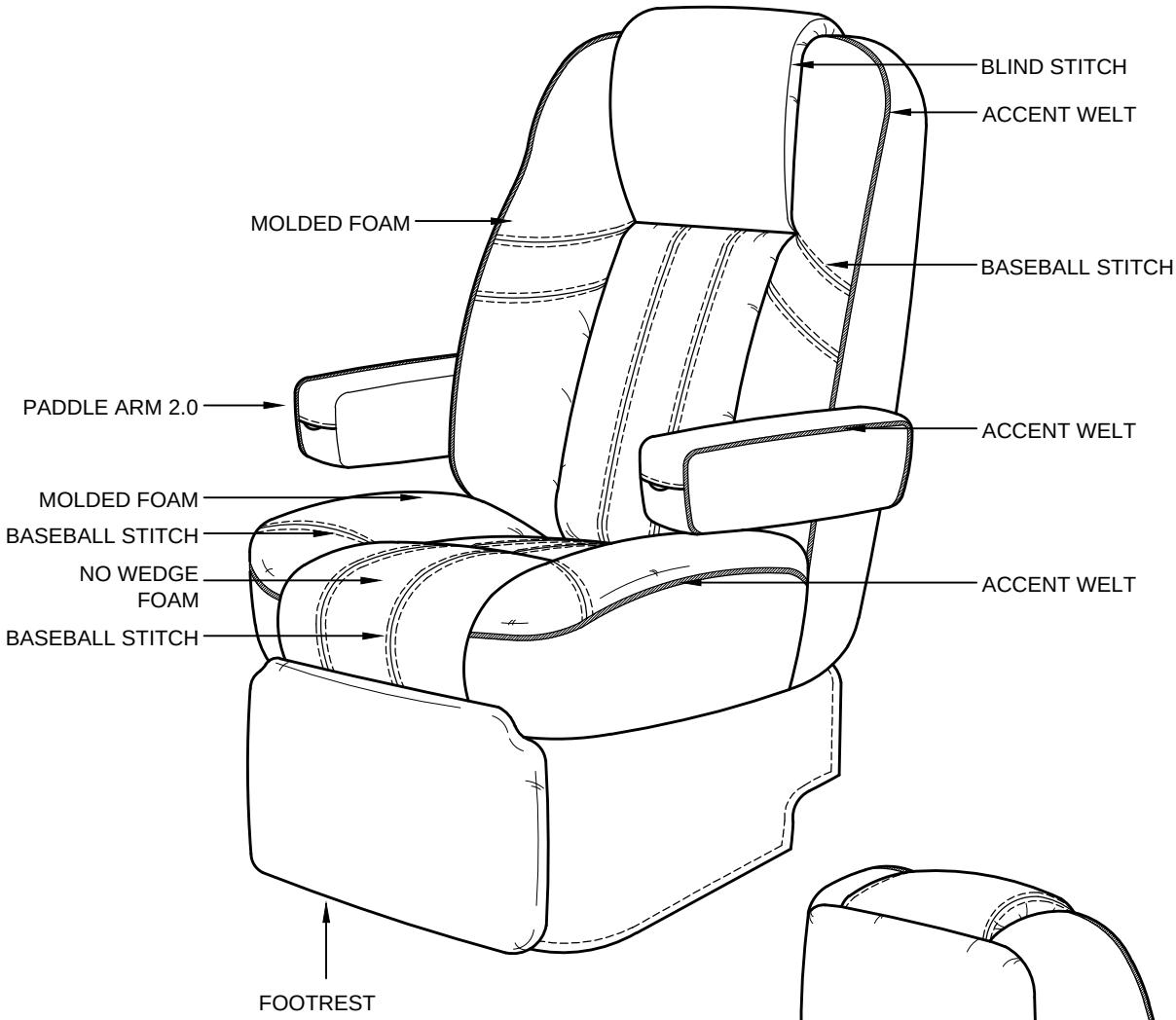

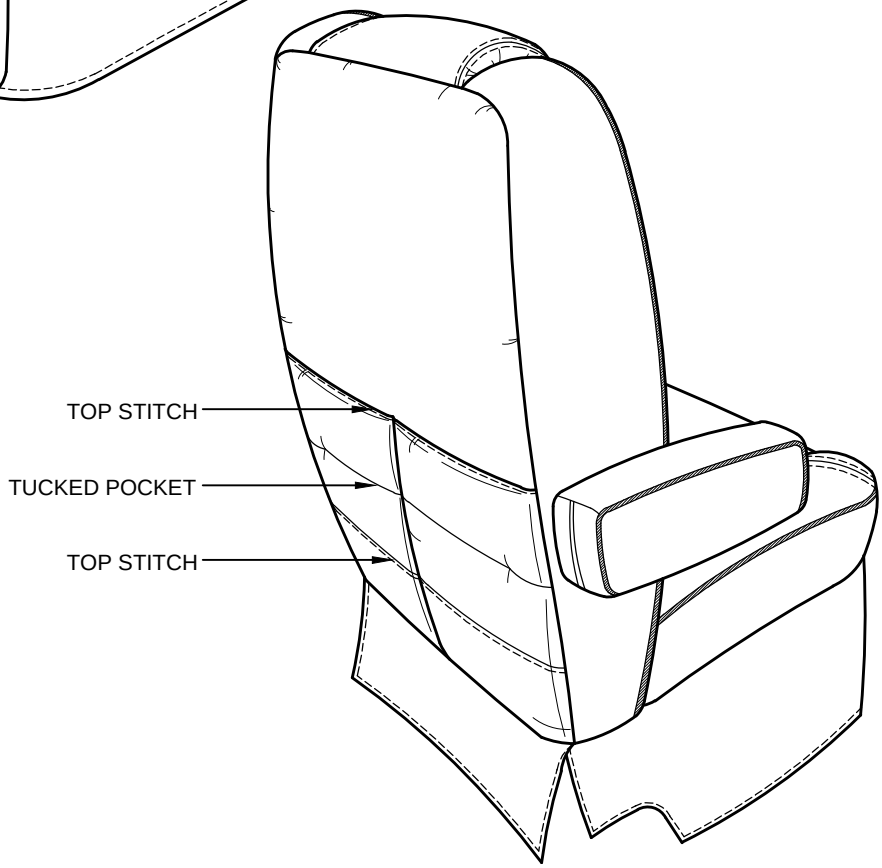

COMFORTFIT
BY VILLA INTERNATIONAL
13760 Midway St.
Cerritos, CA 90703
Tel 562-404-8111
Fax 562-404-7781

TITLE	DWG. NO.	REV.	APV		
2022 VENTANA CO-PILOT SEAT	CF6000863	-	FTBM	SCALE 1:1 DO NOT SCALE DRAWING.	
	DR J.ANCHETA	DATE 08.17.2020	08.18.2020	UNLESS OTHERWISE SPECIFIED DIMENSIONS ARE IN INCHES.	

THIS DRAWING IS THE PROPERTY OF VILLA INTERNATIONAL MFG. ALL RIGHTS RESERVED.

--	-	
--	-	

REVISIONS