CUT PATTERN	
BACK FRAME NO.	
BASE FRAME NO.	
WOOD PATTERN	

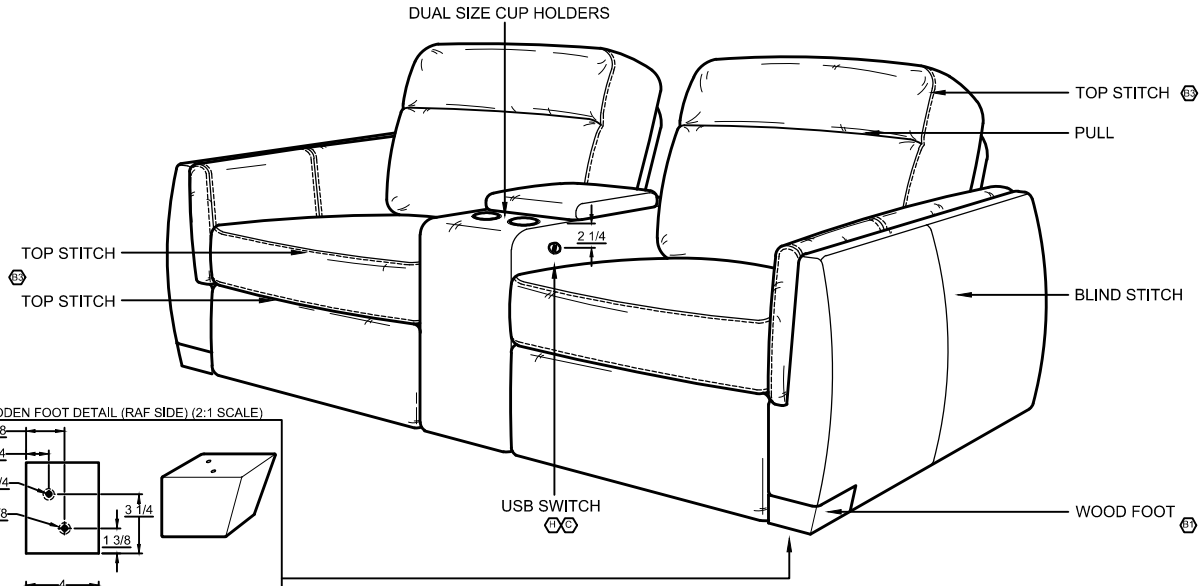

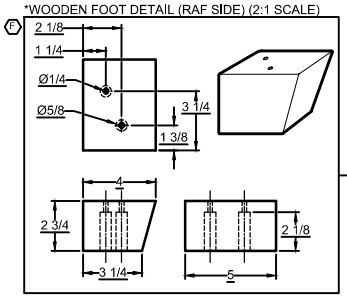

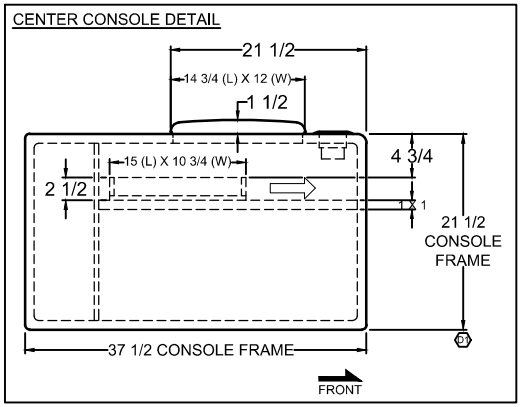

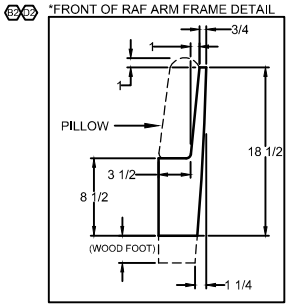

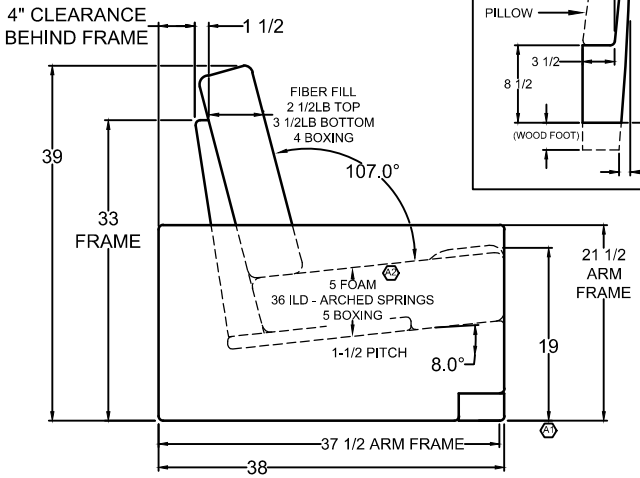

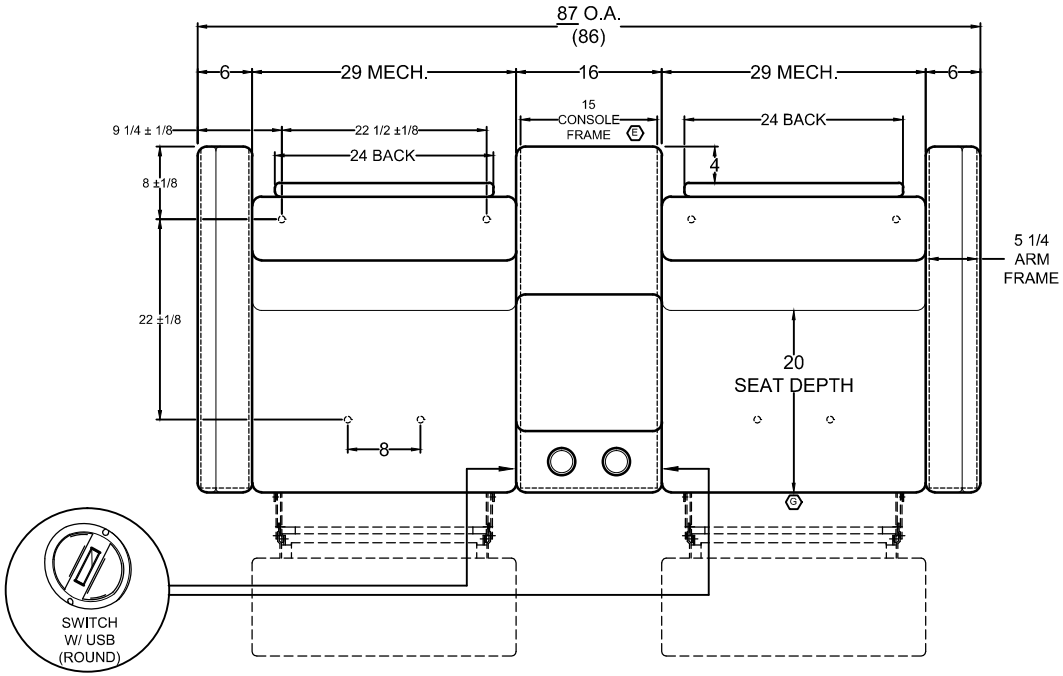

JA	H	CHANGE SWITCH HEIGHT FROM TOP OF CONSOLE TO 2-1/4"; WAS 3-1/4". (REF. ECO #004-2022)	02.11.22
JA	G	PER KB, ADD 20" SEAT DEPTH DIMENSION TO DRAWING.	07.14.21
JA	F	PER RL, ADD WOODEN FOOT DETAIL AND DIMENSIONS.	07.14.21
JA	E	PER RL, CHANGE CONSOLE FRAME WIDTH TO 15"; WAS 15-1/4".	06.01.21
JA	D	PER RL, [1] CHANGE CONSOLE FRAME HEIGHT TO 21-1/2"; WAS 23-1/2". [2] UPDATE DIMENIONS IN ARM FRAME DETAIL.	05.26.21
JA	C	PER RL, MOVE FOOTREST SWITCH TO THE CENTER CONSOLE.	05.24.21
JA	B	PER RL, [1] CHANGE ARM STYLE AND ADD WOODEN FOOT. [2] ADD FRONT OF ARM FRAME DETAIL. [3] CHANGE WELTS TO TOP STITCH.	05.19.21
JA	A	[1] CHANGE SEAT HEIGHT TO 19"; WAS 18-1/2". [2] CHANGE SEAT FOAM TO 5"; WAS 3". (REF. ECO# 003-2021)	03.17.21

REVISIONS

COMFORTFIT
BY VILLA INTERNATIONAL
13760 MIDWAY STREET
CERRITOS CA 90703
(562) 404-8111
FAX (562) 404-7781

TITLE: 2023 DSDP
87" HOME THEATER

DWG. NO. CF7000538 | REV. H

DR J.ANCHETA | DATE 02.08.21

APV FTBM 02.10.21

SCALE 1:1
DO NOT SCALE DRAWING.
UNLESS OTHERWISE SPECIFIED DIMENSIONS ARE IN INCHES.

THIS DRAWING IS THE PROPERTY OF VILLA INTERNATIONAL MFG. ALL RIGHTS RESERVED.