CUT PATTERN	
BACK FRAME NO.	
BASE FRAME NO.	
WOOD PATTERN	

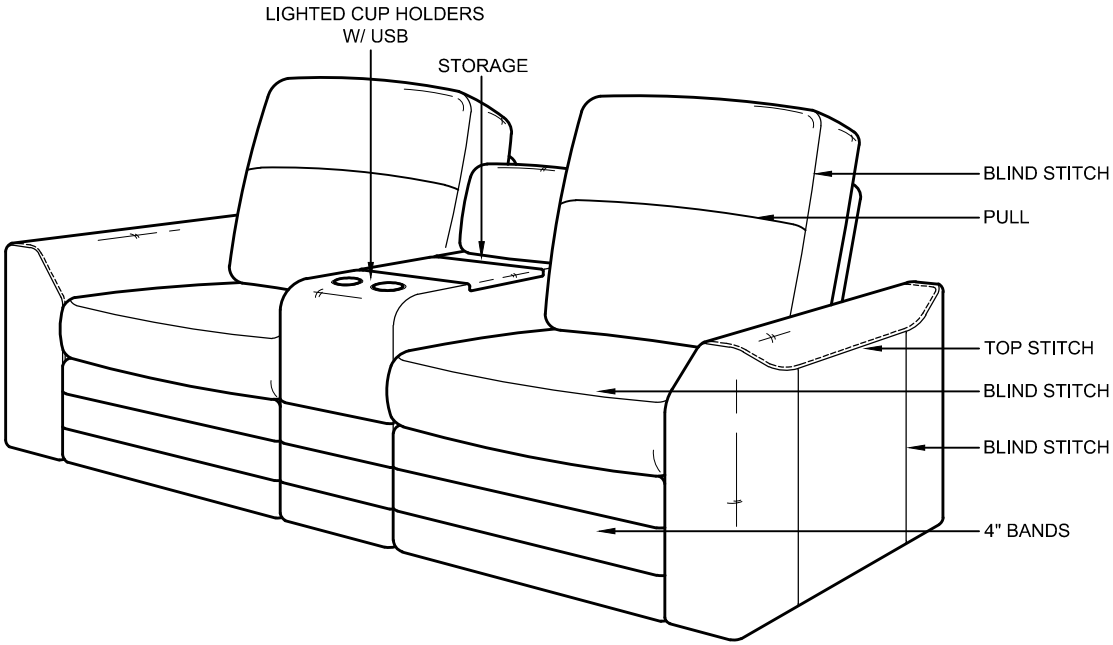

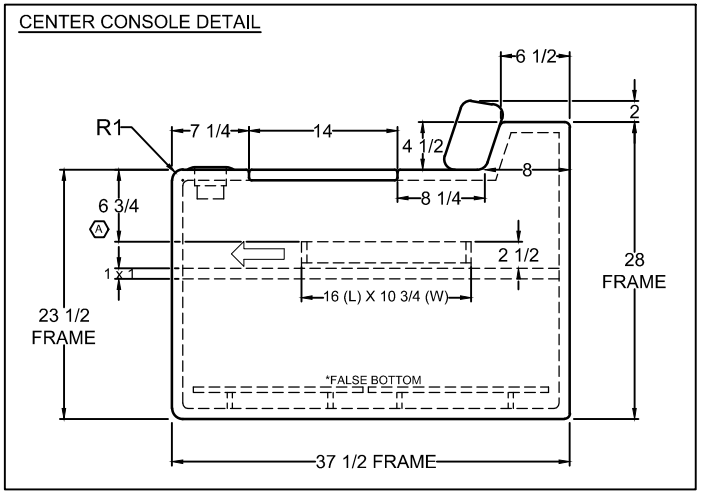

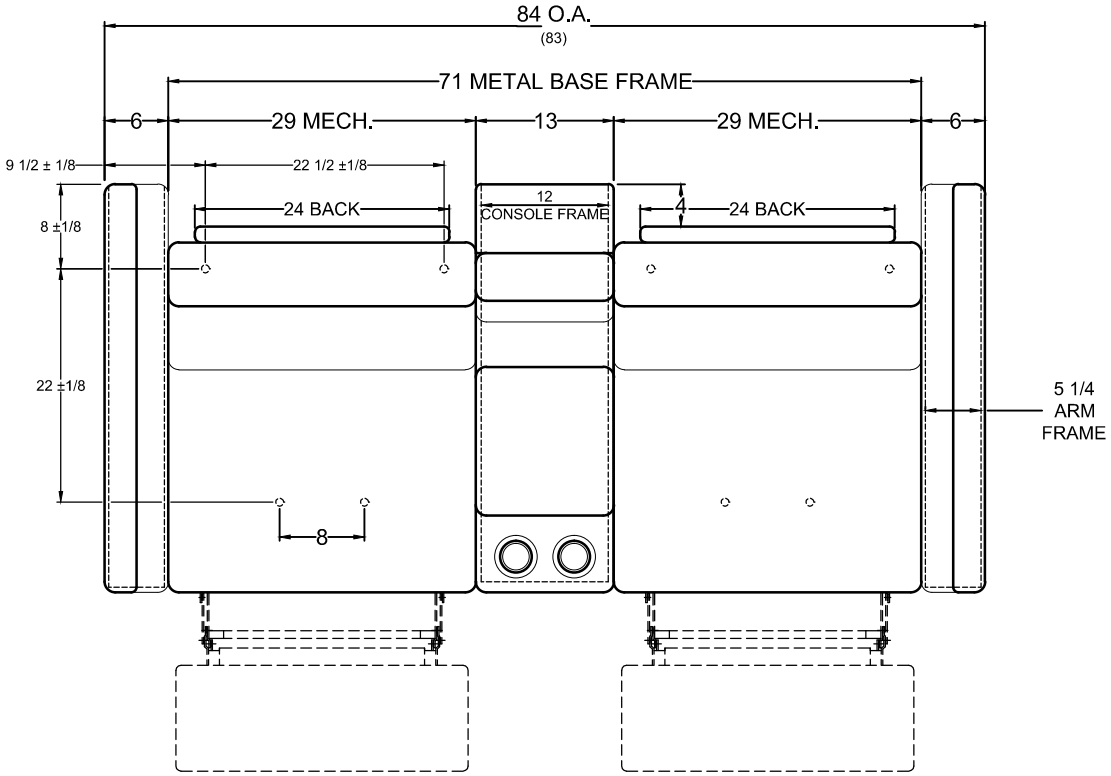

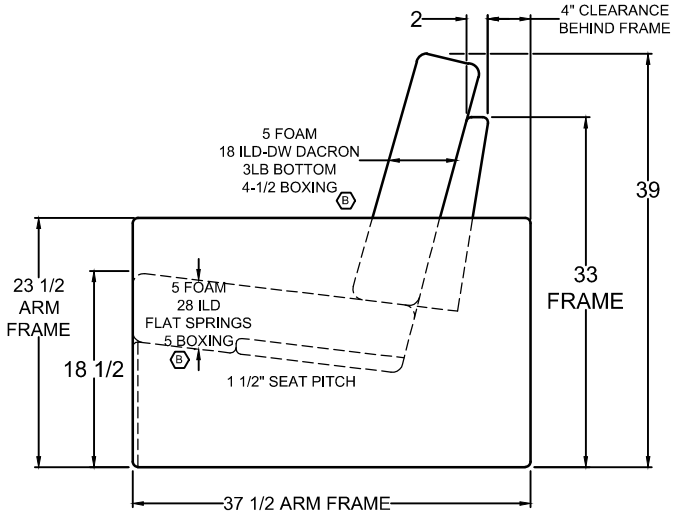

VILLA INTERNATIONAL
13760 Midway St.
Cerritos, CA 90703
Tel 562-404-8111
Fax 562-404-7781

TITLE	DWG. NO.	REV.	APV	SCALE 1:1
2025 MOUNTAIN AIRE 84" HOME THEATER	VI7000671	B	FTBM 12.21.23	DO NOT SCALE DRAWING. UNLESS OTHERWISE SPECIFIED DIMENSIONS ARE IN INCHES.
	DR J.ANCHETA	DATE 10.25.23		

THIS DRAWING IS THE PROPERTY OF VILLA INTERNATIONAL MFG. ALL RIGHTS RESERVED.

JA	B	PER LP, ADD 4-1/2" BOXING TO BACK PILLOW AND 5" BOXING TO SEAT CUSHION.	05.29.24
JA	A	PER RL, CORRECT CONSOLE SHELF HEIGHT TO 6-3/4"; WAS 4-3/4".	02.21.24

REVISIONS