ITEM	PART #	DESCRIPTION	QTY.
1	132-041069	WEATHERSTRIP BELT	1

A2

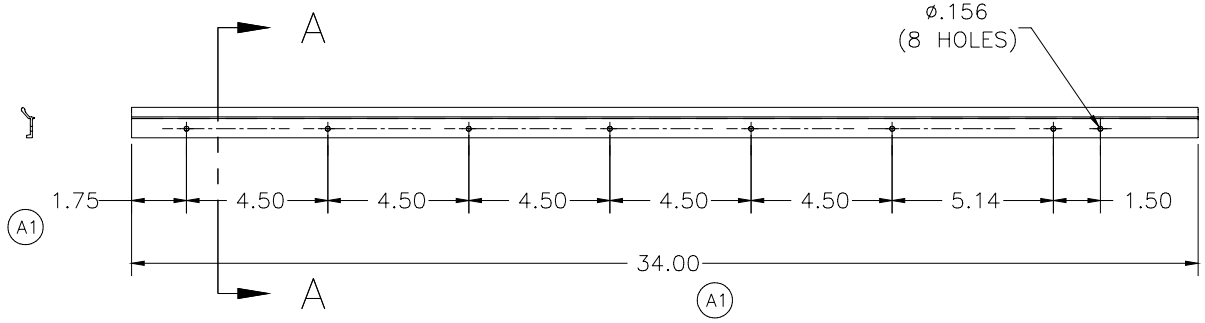

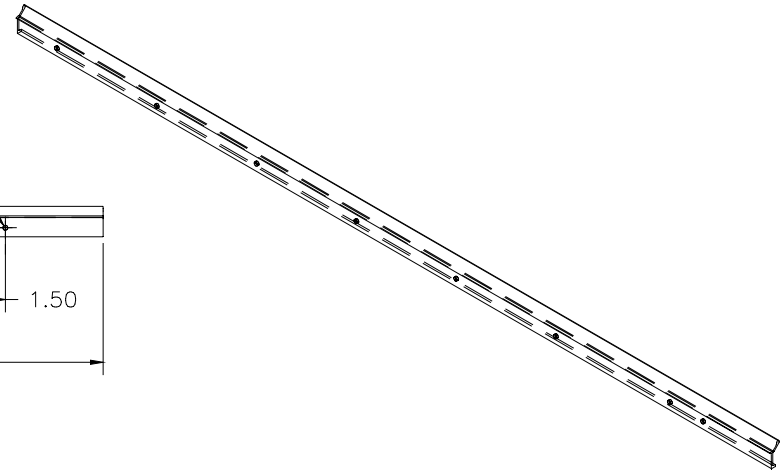

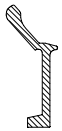

SECTION A–A
SCALE 1:1

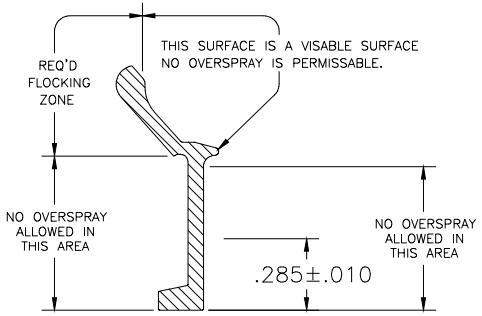

SECTION A–A
SCALE 2:1

NOTES:

1. FLOCKING MUST MEET GM2724M CRITERIA.
2. FLOCK TO BE .030–3 DENIER BLACK POLYESTER FIBER.
3. FLOCKING PROCESS AND GLUE MUST COMPATIBLE WITH POLYPROPLENE SUBSTRATE.
4. EDGES OF FLOCKING MUST BE VISUALLY STRAIGHT.

☐ = IDENTIFIES SIGNIFICANT CHARACTERISTICS

E.C. NO.	REV. LETTER	DESCRIPTION OF CHANGE	BY	APPR.	DATE
E6330	A	2) 132-041069 WAS 490665 1) 34.00 DIM WAS 32.00, 1.75 DIM WAS .75	PR	DK	9/10/03
N6204	AR	RELEASED FOR PRODUCTION	PR	DK	5/15/03
—	**	AS DRAWN	PR	DK	5/15/03

CONFIDENTIALITY

THIS DRAWING IS THE PROPERTY OF ATWOOD MOBILE PRODUCTS. IT SHALL NOT BE COPIED OR DUPLICATED IN ANY MANNER, AND SHALL NOT BE SUBMITTED TO OUTSIDE PARTIES FOR EXAMINATION WITHOUT OUR CONSENT. IT SHALL BE USED WITH REFERENCE TO WORK UNDER CONTRACT OR PROPOSALS SUBMITTED BY ATWOOD MOBILE PRODUCTS ONLY.

PLOT SCALE: (FOR REFERENCE ONLY)

Tolerances: Unless Noted	
Decimal	
.X	± .010
.XX	± .03
.XXX	± N/A
Fractional	± N/A
Angular	± N/A

DRAWN BY: PR DATE: 5/15/03
APPROVED BY: DK DATE: 5/15/03

Atwood Mobile Products
LaGrange Operations; LaGrange, In.
Elkhart Operations; Elkhart, In.

DRAWING SCALE: 1:4 & NOTED
DESCRIPTION: WEATHERSTRIP BELT – FLOCKED

FILE NAME:	SHEET SIZE:	CLASS CODE:	PART NUMBER:	SHEET NO.
490664	B		490664	1 OF 1