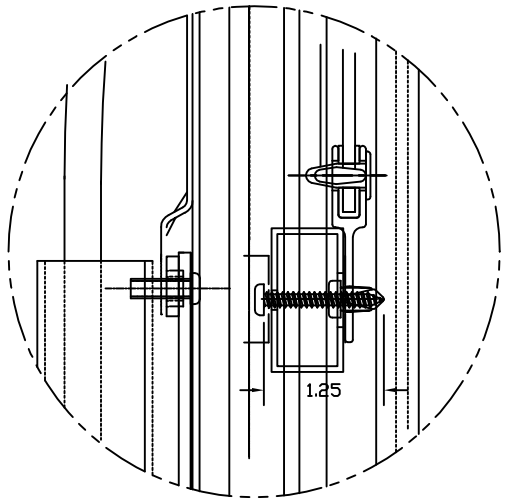

DETAIL K
SCALE : FULL

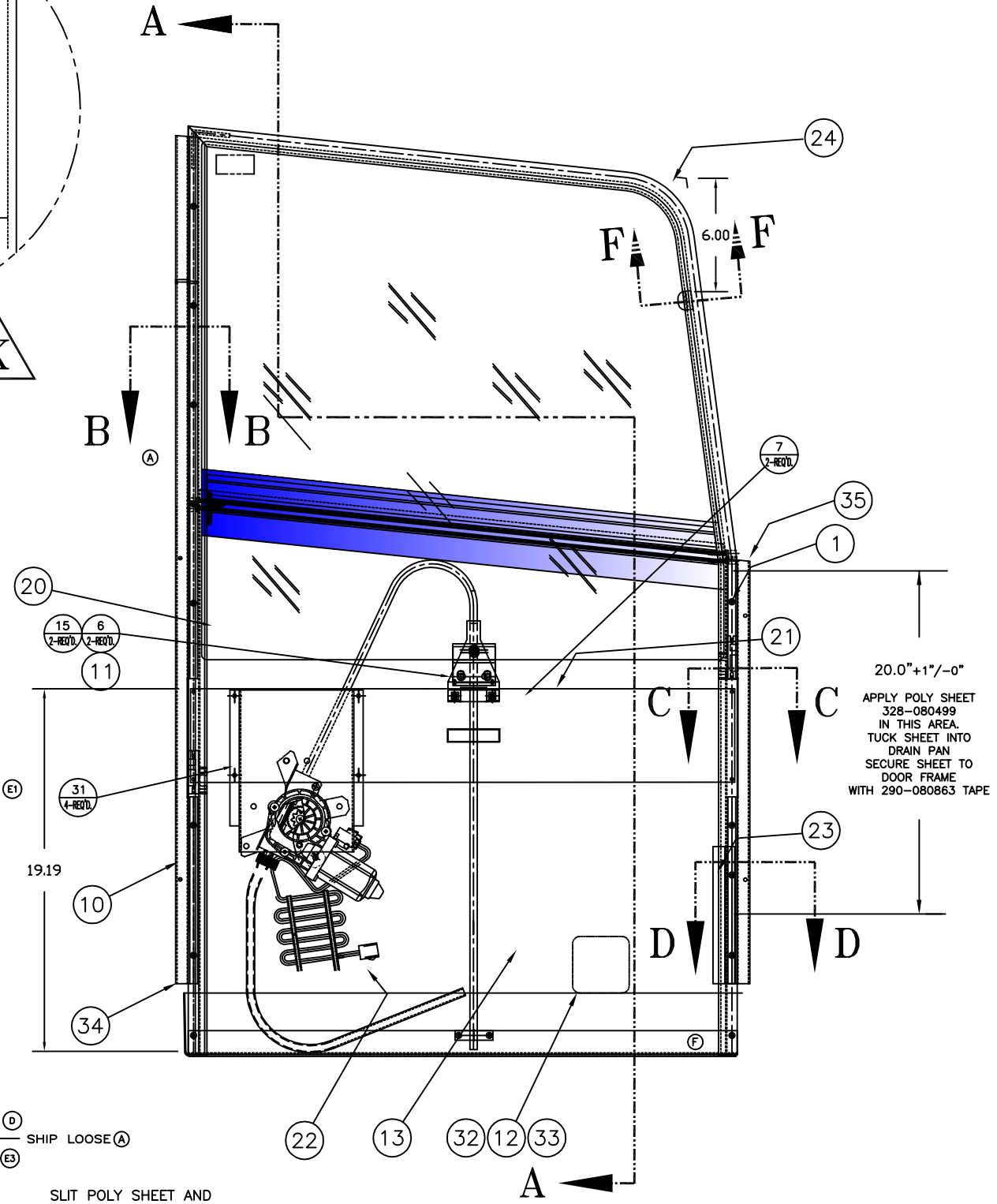

20.0"+1"/-0"

APPLY POLY SHEET 328-080499 IN THIS AREA. TUCK SHEET INTO DRAIN PAN SECURE SHEET TO DOOR FRAME WITH 290-080863 TAPE

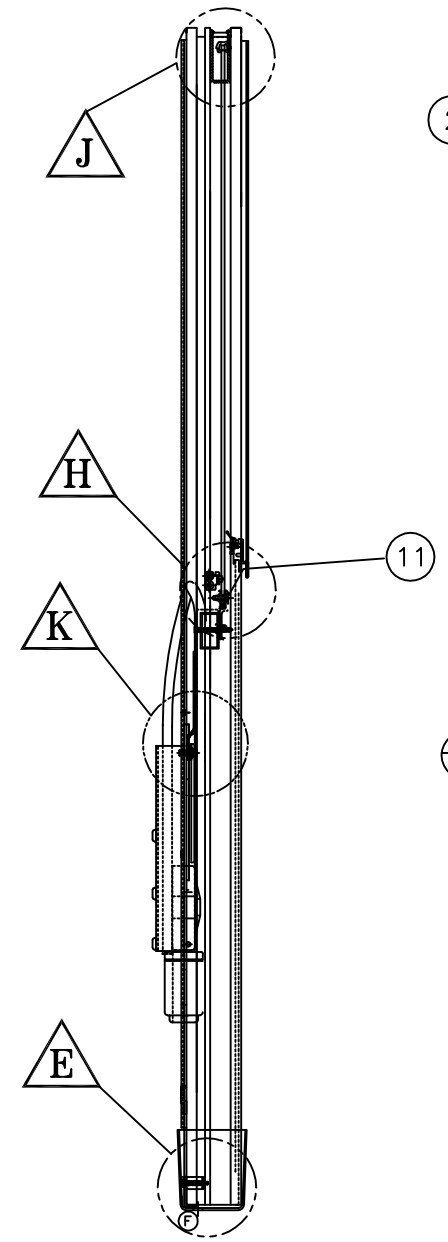

SECTION A-A

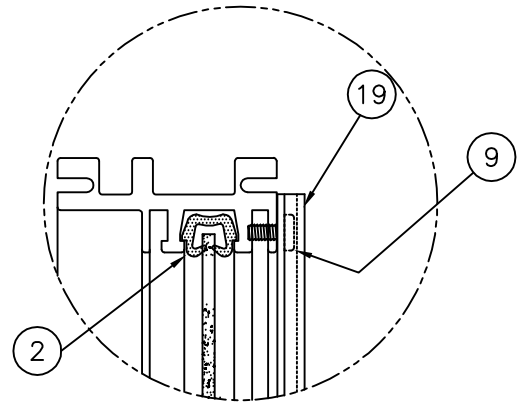

DETAIL J
SCALE: FULL

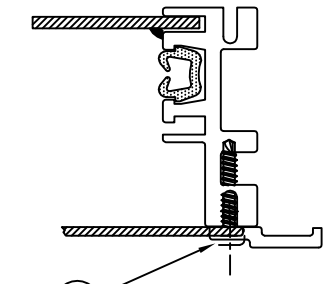

SECTION C-C
SCALE: FULL

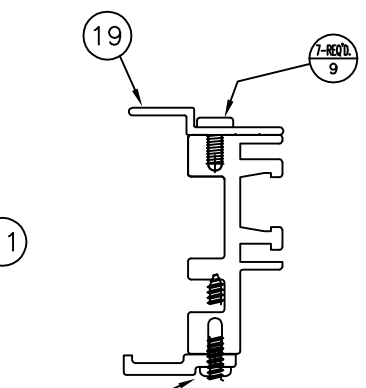

SECTION B-B
SCALE: FULL

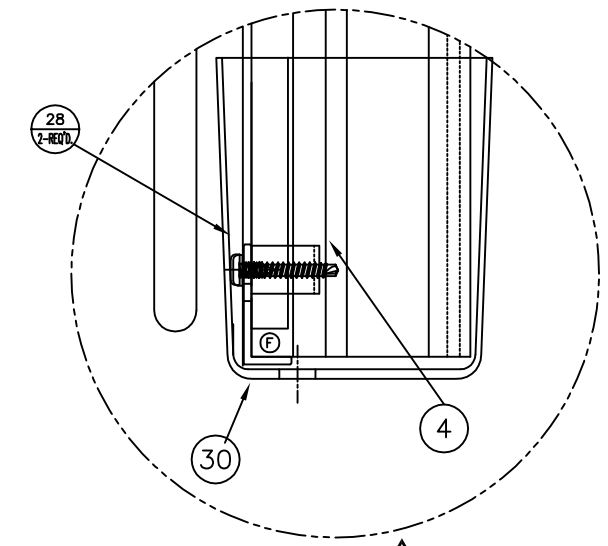

DETAIL E
SCALE: FULL

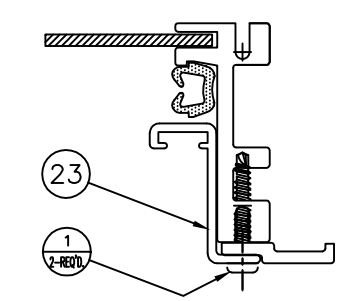

SECTION D-D
SCALE: FULL

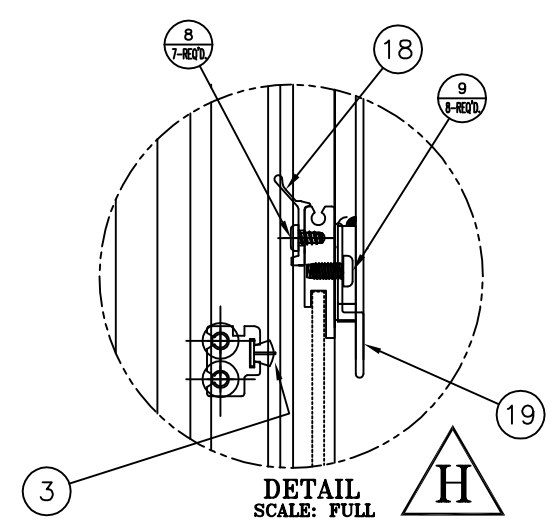

DETAIL H
SCALE: FULL

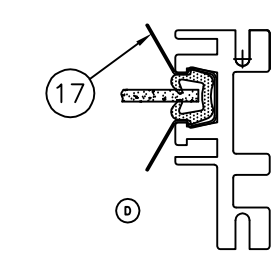

SECTION F-F
SCALE: FULL

ITEM NO.	PART NUMBER	DESCRIPTION	QTY.	
35	492175	TRIM RETAINER RIGHT	1	
34	492103	TRIM RETAINER LEFT	1	E1
33	292-040595	PLASTIC LABEL COVER	1	
32	292-040594	SERIAL NUMBER LABEL	1	
31	268-041672	SCREW - #10 x 5/8 TH	4	
30	492092	DRAIN PAN	1	
29	333-041220	PALLET (NOT SHOWN)	.10	
28	272-080680	SCREW - #8 x 3/8 PH	2	
27	330-040775	10-PAK CARTON (NOT SHOWN)	.10	
26	330-040774	SINGLE PAK CARTON (NOT SHOWN)	1	
25	329-080623	POLY BAG (NOT SHOWN)	1	
24	492167	OUTER FRAME ASSEMBLY (MATTE BLACK) - DR	1	
23	492091	GLASS RETAINER	1	
22	V242-89R	REGULATOR; MODIFIED ELECTRIC	1	
21	492093	SUPPORT BAR PANEL	1	
20	492176	ROLL-UP GLASS ASSEMBLY - DR	1	
19	492166	POWER WINDOW TRIM FRAME	1	
18	490664	WEATHERSTRIP BELT	1	
17	008040789	BLOWOUT CLIP	1	D
16	491828	SCREW COVER (SHIPPED LOOSE)	4.5 FT.	
15	492620	SCREW - #10 x 1.25 PH	2	E3
14	301-011791	ADHESIVE - 3M #4799	AS REQ'D.	
13	328-080499	POLY SHEET	1.6 FT.	
12	490757	PATENT LABEL (LOCATION)	1	
11	492107	REGULATOR SPACER	1	
10	290-080863	TRANSFER TAPE	3.3 FT.	
9	272-040582	SCREW - #8-32 x 3/8 PH TAPTITE	15	
8	272-031065	SCREW - #6 x 1/4 PH	7	
7	262-080385	SCREW - 1/4-20 x 5/8 PH	2	
6	250-080392	WASHER - GLASS CHANNEL	2	
5				
4	V123-42	WINDOW REGULATOR BRACKET	1	
3	490716	WEATHERSTRIP - FUZZY	2.50 FT.	
2	122-016543	RUN CHANNEL	10 FT.	G
1	274-040492	SCREW - #8 x 18 x 1 SELF DRILL	15	C E2
ITEM NO.	PART NUMBER	DESCRIPTION	QTY.	

NOTES:

1) INSIDE VIEW OF DRIVER SIDE SHOWN

2) MUST COMPLY WITH ALL APPLICABLE SECTIONS OF FMVSS 205 & FMVSS 206.

= IDENTIFIES SIGNIFICANT CHARACTERISTICS

CONFIDENTIALITY
THIS DRAWING IS THE PROPERTY OF ATWOOD MOBILE PRODUCTS. IT SHALL NOT BE COPIED OR DUPLICATED IN ANY MANNER, AND SHALL NOT BE SUBMITTED TO OUTSIDE PARTIES FOR EXAMINATION WITHOUT OUR WRITTEN CONSENT. ANY INFORMATION REFERENCE TO CONCERNING SHALL NOT BE DISCLOSED OR SUBMITTED BY ATWOOD MOBILE PRODUCTS ONLY.

Tolerances: Unless Noted
Decimal: .X ±, .XX ± .02, .XXX ± .010
Fractional ±
Angular ±

PLOT SCALE: (FOR REFERENCE ONLY)

ZONE	E.C. NO.	REV. LETTER	DESCRIPTION OF CHANGE	BY	APPR.	DATE
A1	E13941	G	122-016543 WAS 122-010850	JAYDU	MS	4-16-10
E8	13328	F	UPDATED BOTTOM RAIL	AS	GE	11/24/08
	E13083	E	3) P/N 492620 WAS 272041671	GE	MS	5/19/08
~	E13083	E	2) QUAN 15 WAS 16 ITEM #1 1) ADD P/N 492175 & 492103	GE	MS	5/19/08
~	E13030	D	ADD P/N 008040789 AND DETAIL F-F	GE	MS	4/28/08
A2	E12877	C	QUAN 16 WAS 13	GE	MS	2/25/08
E2	E12675	B	UPDATED FRIT POSITION	GE	MS	11/7/07
B1	E12317	A	ADDED P/N 491828 4.5 FT	GE	MS	8/7/07
—	E11558	AR	RELEASED FOR PRODUCTION	ENT	GE	5/4/07
—	—	**	AS DRAWN	ENT	GE	5/1/07

DRAWN BY: ENT DATE: 5/1/07
APPROVED BY: GE DATE: 5/4/07

Atwood Mobile Products
LaGrange Operations: LaGrange, In.
Elkhart Operations: Elkhart, In.

DRAWING SCALE: 1:4 & NOTED
DESCRIPTION: POWER WINDOW DRIVER EX08
FILE NAME: 491869
SHEET SIZE: D
CLASS CODE:
PART NUMBER: 491869
SHEET NO. 1 of 1