ITEM #	QTY	NEWMAR #	DESCRIPTION
1	1	109816	STEEL, BLACK POWDER COAT

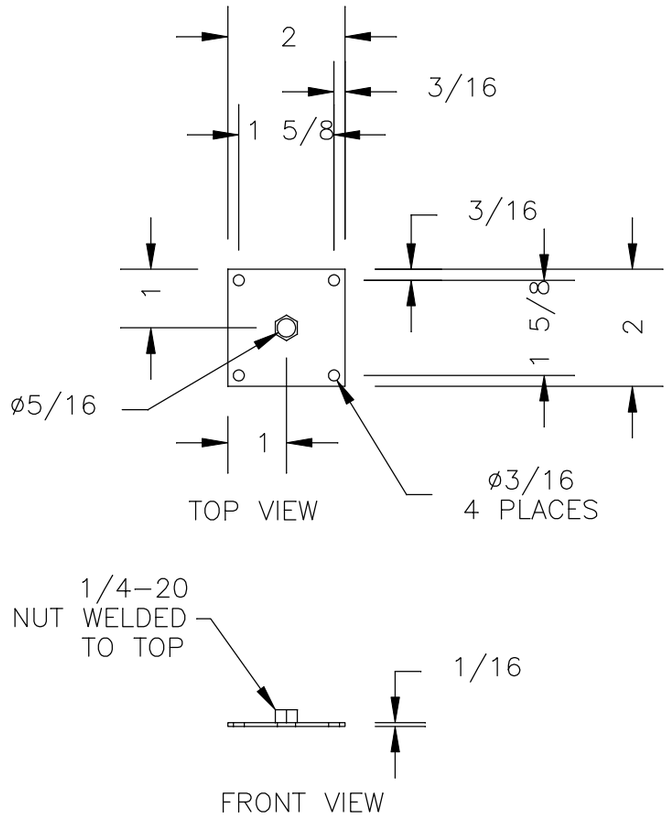

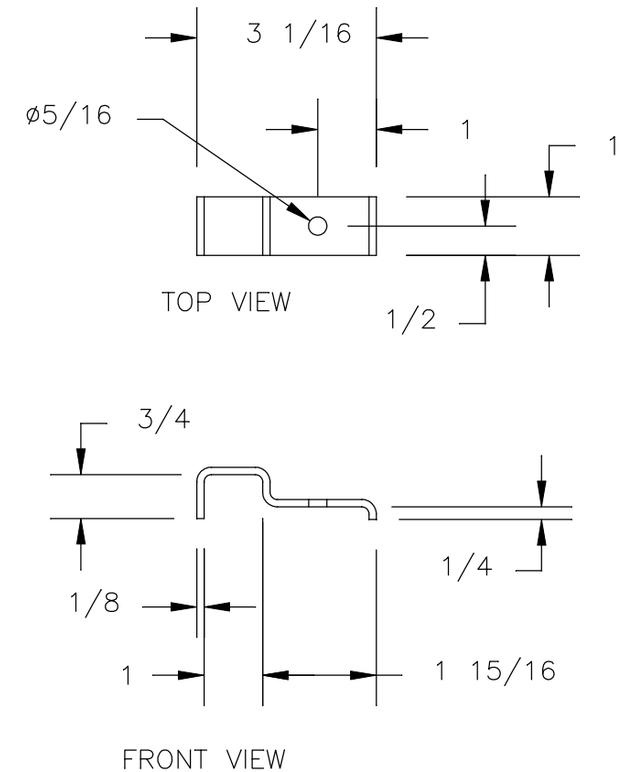

NEWMAR CORP P.O. Box 30, Nappanee, IN. 46550	Model: AT ME (SEE INDEX)	Sheet 1 OF 1	Drawn by: K. C.	Checked by: J. B.	Revision: REVISED NOMENCLATURE.	By: J. B. Date: 5/5/08
UNITS: INCHES TITLE BLOCK: 5TB	Title: FREE STANDING CHAIR LATCH	I.D. # 2009\ME\CAB\LR\MISC2004	Date: 12/12/07	Date: 12/13/07	Revision: CHANGED NOMENCLATURE TO (SEE INDEX)	By: C. M. Date: 4/14/08