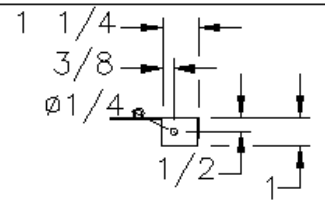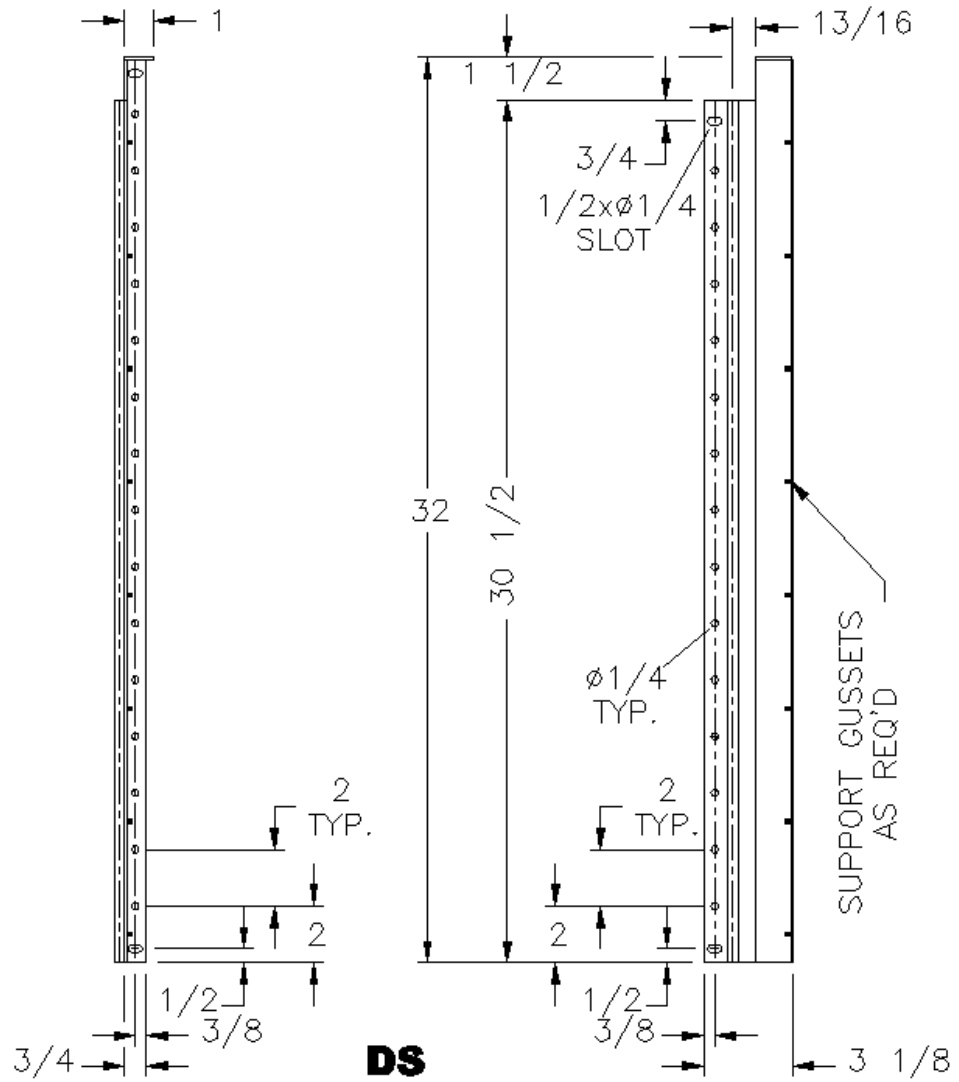ITEM #	QTY	NEWMAR #	DESCRIPTION
1	–	116605	.070 GALVANNEALED BLACK