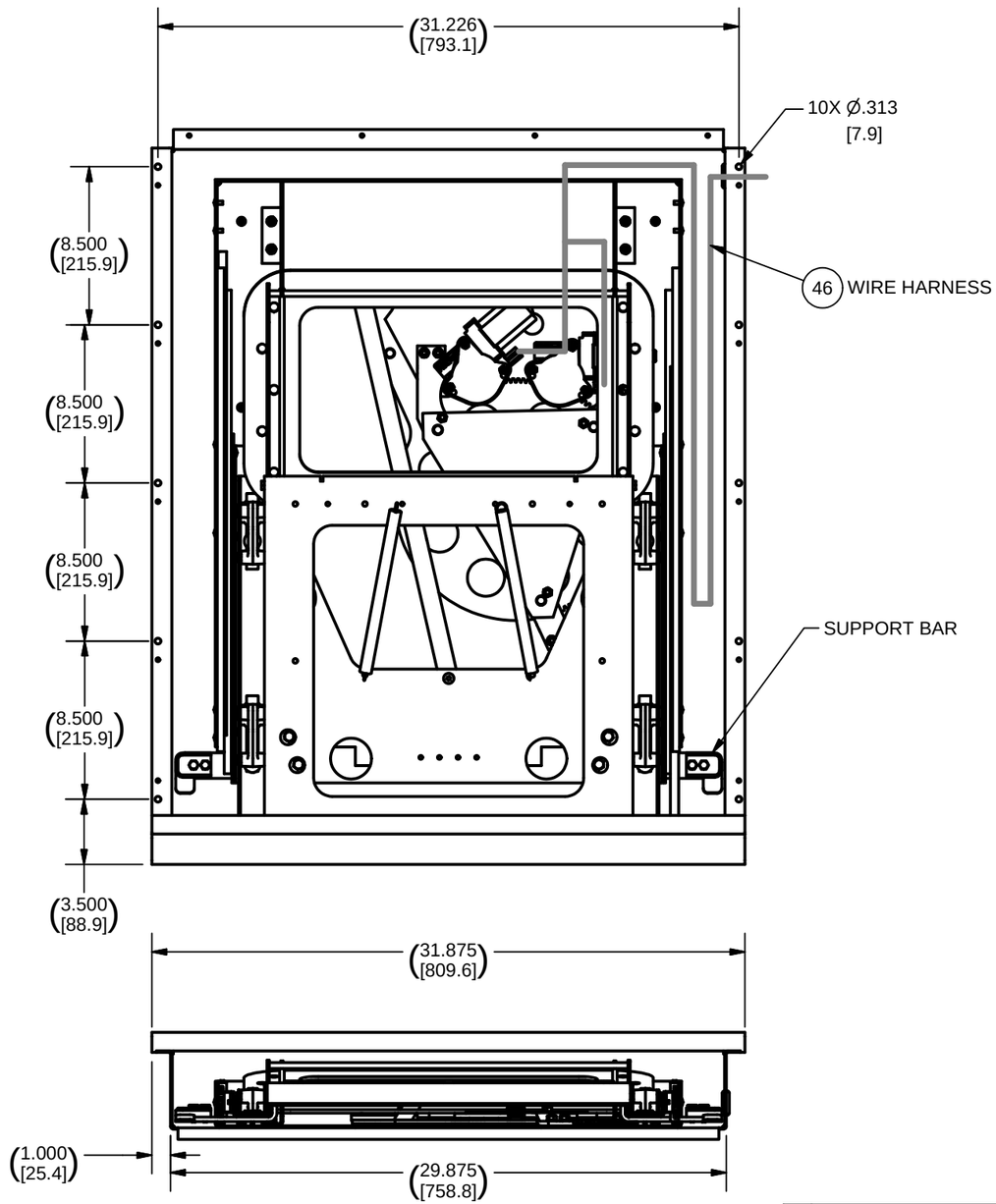

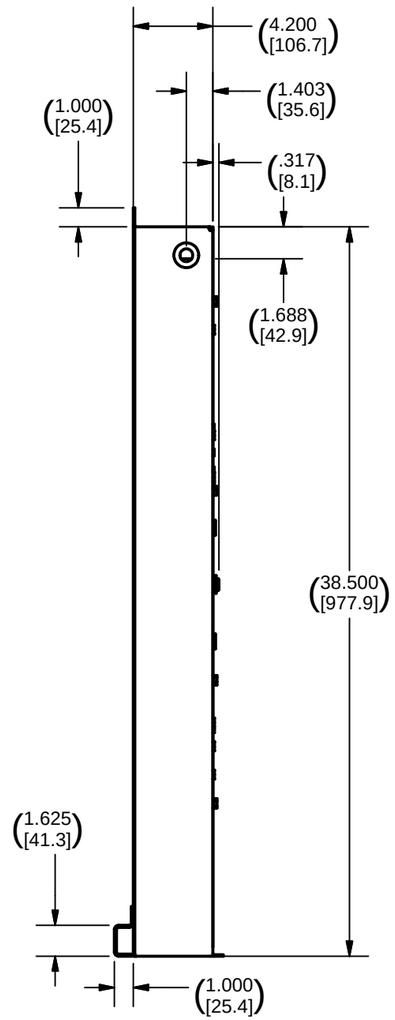

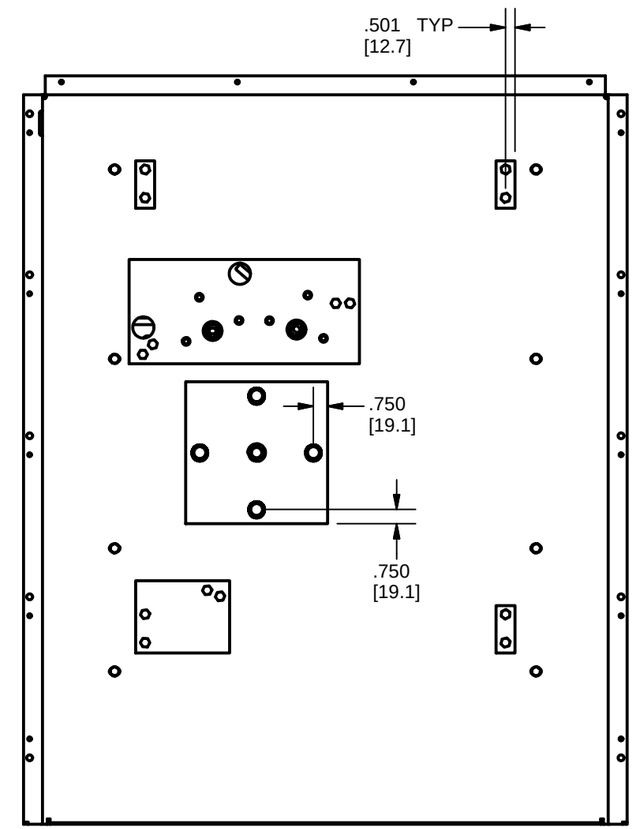

SIMILAR TO 906152001

DO NOT SCALE

DESCRIPTION
STEP COVER ELEC POWERED 29 7/8 OD

MATERIAL

SIZE B

PROJECTION

LEGEND
REVISION
CRITICAL
TOTAL NO. OF ◇ USED

TOLERANCES
UNLESS OTHERWISE SPECIFIED
.X ± .1
.XX ± .03
.XXX ± .015
ANGLE ±1°
BREAK ALL SHARP EDGES .005/.030

THIS DOCUMENT AND THE INFORMATION CONTAINED HEREIN IS THE SOLE PROPERTY OF ACTUANT AND ITS SUBSIDIARIES. IT CONTAINS PROPRIETARY INFORMATION, WHICH IS CONFIDENTIAL. ANY USE OR REPRODUCTION OF THIS DRAWING WITHOUT AUTHORIZATION FROM ACTUANT OR ITS SUBSIDIARY MAY WARRANT LEGAL ACTION AGAINST THE USER.

REV	DATE	BY	ECO #
0A	4/4/2011	PWQ	11-020-1
0B	7/14/2011	PWQ	11-001-65

DRAWN: PWQ
DATE: 2/16/2011

Power Gear
MISHAWAKA, IN USA

POWER GEAR
JOEY BED
KODIAK
KWIKEE

PART NUMBER **9010000607**
REV. **0B**

ESR: 11-020 | SCALE: 1:8 | UNITS: INCHES [mm] | SHEET 1 OF 4

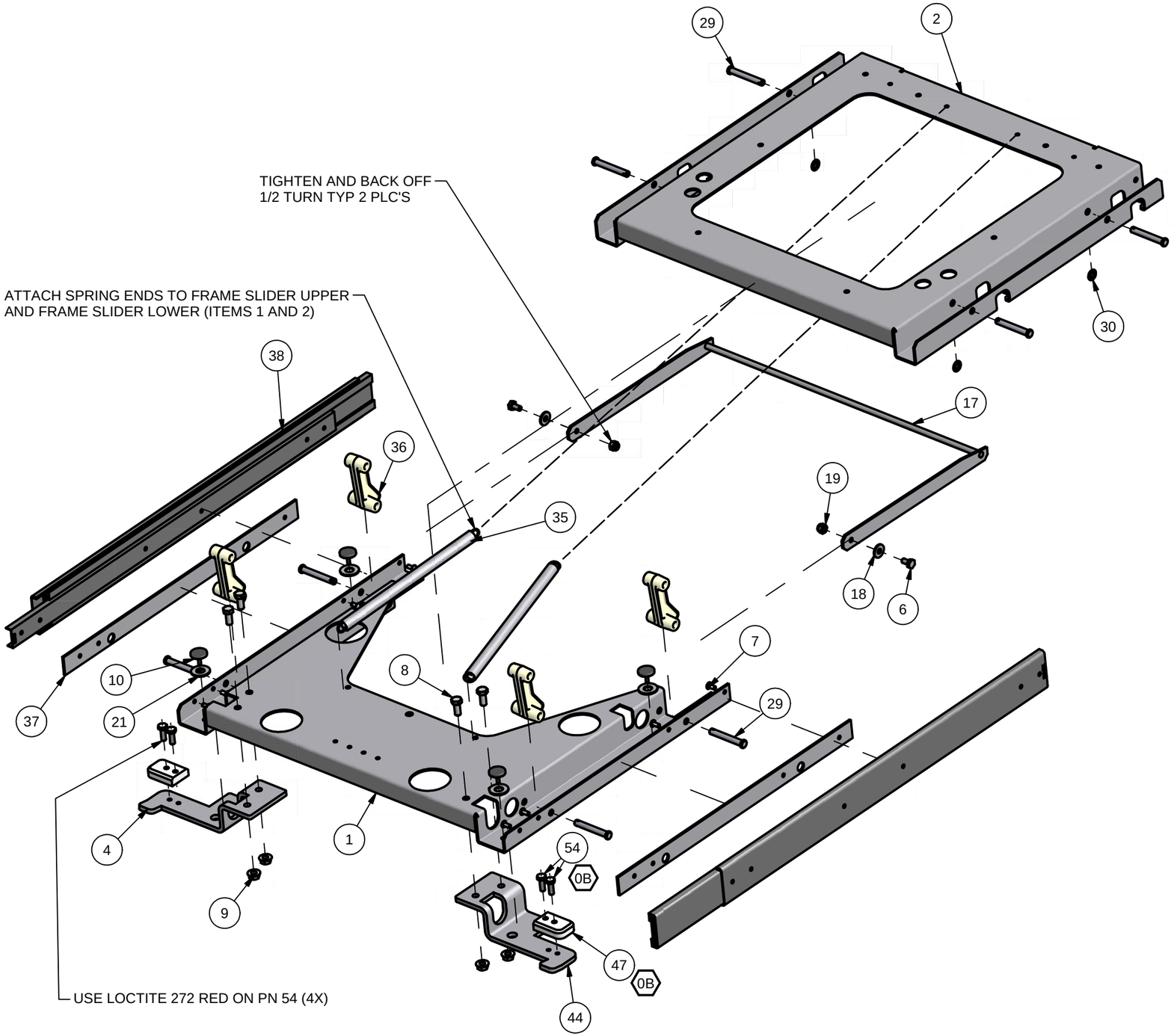

ITEM	PART NUMBER	QTY	DESCRIPTION
0B	54	15-1003	4	HHC 1/4-20 3/4 LENGTH
0B	47	3010002506	2	STEP WELL COVER SLIDE BLOCK
	46	1809867	1	WIRE HARNESS
	45	1612669	1	RUBBER GROMMET 1/2" X 13/16" X 1/8"
	44	3010002411	1	BRACKET FRONT END SUPPORT LH 29 7/8
	43	3354224	1	GEAR SUPPORT CURVED STEPWELL
	42	3354223	2	GEAR SUPPORT STRAIGHT STEPWELL
	41	1612572	1	PLASTIC, BOLT HOLE COVER 906152001
	40	1010002199	1	SHELL CASING WELDED
	39	1612544	2	PLASTIC SUPPORT BLOCK
	38	1910900	2	SLIDE 26" 477018 250LBS
	37	3610462	2	BRACKET ADAPTER SLIDE
	36	1612547	4	PLASTIC LIFTER CAM
	35	1217511	2	SPRING .625 OD X .075 WIRE C 10 LG
	34	1612568	2	WEAR PAD, PLASTIC DROP ROD BRKT
	33	3354225	1	GEAR SUPPORT BEARING STEPWELL
	32	7204531	1	0.625" SHAFT, MOTOR PLATE
	31	1612730	5	GUIDE BUTTON 24
	30	1216340	8	RING RETAINING 5/16" ROUND PUSH ON
	29	1213239	8	PIN CLEVIS 5/16" X 2 1/4"
	28	1102015	1	BEARING 5/8" ID
	27	1205600	14	NUT 1/4-20 HEX
	26	1203040	6	BOLT 1/4-20 X 3/4 HH GR.5
	25	1205405	6	NUT 10-24 NYLOCK
	24	1201390	6	SCREW #10-24 X 1 1/4 HWH SELFTAP
	23	1220056	6	STANDOFF MOTOR 24 25
	22	1820124	2	MOTOR 14NM DAEDONG RH
	21	1210020	4	WASHER 3/8 FLAT
	20	1217010	2	RETAINING RING "E" 5/8" BOWED--EXT
	19	1205620	5	NUT 1/4-20 NYLOCK
	18	1209410	2	WASHER 1/4 FLAT
	17	7201077	1	DROP ROD ASSY
	16	1206210	1	NUT 3/8-16 NYLOCK
	15	1210060	1	WASHER .390 X .750 X .050 NYLON
	14	1203405	1	BOLT 3/8 X 3/8 SOC SHLDR SS
	13	3380121	1	LINKAGE DRIVE ASSY STEP WELL
	12	3010002428	1	BRKT LIFTER ARM RH
	11	3010002429	1	BRKT LIFTER ARM LH
	10	1602025	4	RUBBER BUMPER PAD 1/4 X 3/16 X 7/8
	9	1205950	4	NUT 5/16-18 SERRATED FLANGE
	8	1203420	4	5/16-18 X 3/4" HH GR. 5
	7	1214630	20	RIVET 3/16X.250 (SB-64)
	6	1203010	18	BOLT 1/4-20 X 1/2" HH GR.5
	5	1209420	22	WASHER 1/4 SPLIT LOCK
	4	3010002410	1	BRACKET FRONT END SUPPORT RH 29 7/8
	3	3610178	1	FRAME, INTERIOR SUPPORT
	2	3610177	1	FRAME SLIDER UPPER RISER
	1	3610176	1	FRAME SLIDER LOWER ELEC

SIMILAR TO 906152001

DO NOT SCALE

Power Gear

MISHAWAKA, IN USA

POWER GEAR
JOEY BED
KODIAK
KWIKEE

PART NUMBER **9010000607**

REV. **0B**

UNITS: INCHES [mm]

SHEET 2 OF 4

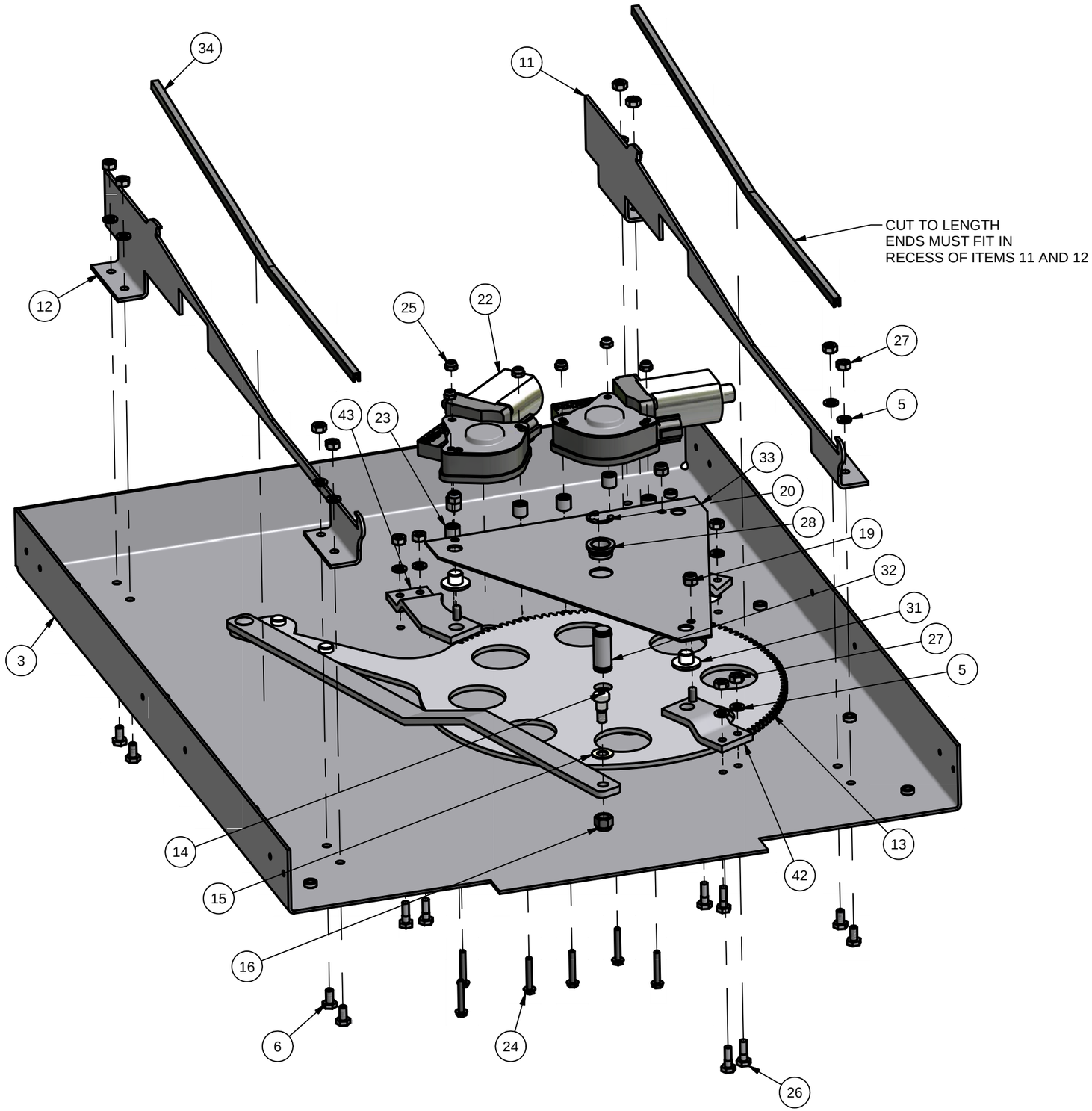

ITEM	PART NUMBER	QTY	DESCRIPTION
54	15-1003	4	HHC 1/4-20 3/4 LENGTH
47	3010002506	2	STEP WELL COVER SLIDE BLOCK
46	1809867	1	WIRE HARNESS
45	1612669	1	RUBBER GROMMET 1/2" X 13/16" X 1/8"
44	3010002411	1	BRACKET FRONT END SUPPORT LH 29 7/8
43	3354224	1	GEAR SUPPORT CURVED STEPWELL
42	3354223	2	GEAR SUPPORT STRAIGHT STEPWELL
41	1612572	1	PLASTIC, BOLT HOLE COVER 906152001
40	1010002199	1	SHELL CASING WELDED
39	1612544	2	PLASTIC SUPPORT BLOCK
38	1910900	2	SLIDE 26" 477018 250LBS
37	3610462	2	BRACKET ADAPTER SLIDE
36	1612547	4	PLASTIC LIFTER CAM
35	1217511	2	SPRING .625 OD X .075 WIRE C 10 LG
34	1612568	2	WEAR PAD, PLASTIC DROP ROD BRKT
33	3354225	1	GEAR SUPPORT BEARING STEPWELL
32	7204531	1	0.625" SHAFT, MOTOR PLATE
31	1612730	5	GUIDE BUTTON 24
30	1216340	8	RING RETAINING 5/16" ROUND PUSH ON
29	1213239	8	PIN CLEVIS 5/16" X 2 1/4"
28	1102015	1	BEARING 5/8" ID
27	1205600	14	NUT 1/4-20 HEX
26	1203040	6	BOLT 1/4-20 X 3/4 HH GR.5
25	1205405	6	NUT 10-24 NYLOCK
24	1201390	6	SCREW #10-24 X 1 1/4 HWH SELFTAP
23	1220056	6	STANDOFF MOTOR 24 25
22	1820124	2	MOTOR 14NM DAEDONG RH
21	1210020	4	WASHER 3/8 FLAT
20	1217010	2	RETAINING RING "E" 5/8" BOWED--EXT
19	1205620	5	NUT 1/4-20 NYLOCK
18	1209410	2	WASHER 1/4 FLAT
17	7201077	1	DROP ROD ASSY
16	1206210	1	NUT 3/8-16 NYLOCK
15	1210060	1	WASHER .390 X .750 X .050 NYLON
14	1203405	1	BOLT 3/8 X 3/8 SOC SHLDR SS
13	3380121	1	LINKAGE DRIVE ASSY STEP WELL
12	3010002428	1	BRKT LIFTER ARM RH
11	3010002429	1	BRKT LIFTER ARM LH
10	1602025	4	RUBBER BUMPER PAD 1/4 X 3/16 X 7/8
9	1205950	4	NUT 5/16-18 SERRATED FLANGE
8	1203420	4	5/16-18 X 3/4" HH GR. 5
7	1214630	20	RIVET 3/16X.250 (SB-64)
6	1203010	18	BOLT 1/4-20 X 1/2" HH GR.5
5	1209420	22	WASHER 1/4 SPLIT LOCK
4	3010002410	1	BRACKET FRONT END SUPPORT RH 29 7/8
3	3610178	1	FRAME, INTERIOR SUPPORT
2	3610177	1	FRAME SLIDER UPPER RISER
1	3610176	1	FRAME SLIDER LOWER ELEC

SIMILAR TO 906152001

DO NOT SCALE

Power Gear

MISHAWAKA, IN USA

POWER GEAR
JOEY BED
KODIAK
KWIKEE

PART NUMBER **9010000607**

REV. **0B**

UNITS: INCHES [mm]

SHEET 3 OF 4

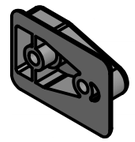

SCALE 1:3

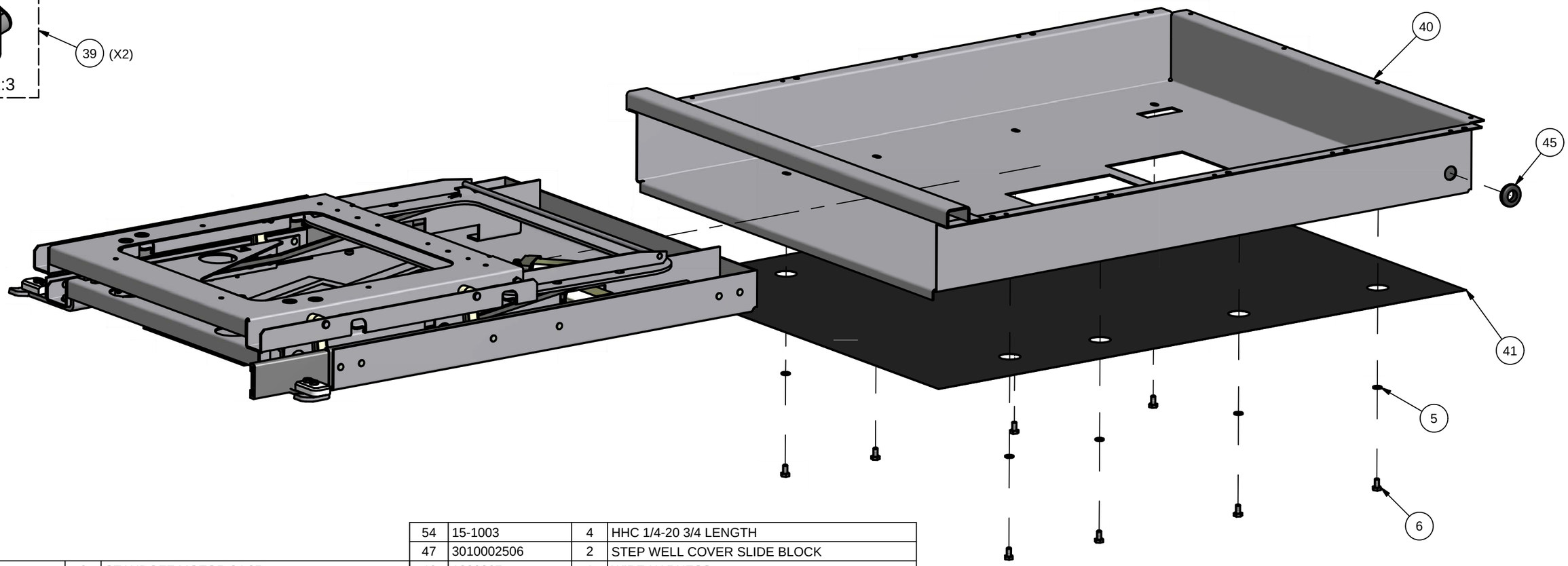

ITEM	PART NUMBER	QTY	DESCRIPTION	ITEM	PART NUMBER	QTY	DESCRIPTION
				54	15-1003	4	HHC 1/4-20 3/4 LENGTH
				47	3010002506	2	STEP WELL COVER SLIDE BLOCK
23	1220056	6	STANDOFF MOTOR 24 25	46	1809867	1	WIRE HARNESS
22	1820124	2	MOTOR 14NM DAEDONG RH	45	1612669	1	RUBBER GROMMET 1/2" X 13/16" X 1/8"
21	1210020	4	WASHER 3/8 FLAT	44	3010002411	1	BRACKET FRONT END SUPPORT LH 29 7/8
20	1217010	2	RETAINING RING "E" 5/8" BOWED--EXT	43	3354224	1	GEAR SUPPORT CURVED STEPWELL
19	1205620	5	NUT 1/4-20 NYLOCK	42	3354223	2	GEAR SUPPORT STRAIGHT STEPWELL
18	1209410	2	WASHER 1/4 FLAT	41	1612572	1	PLASTIC, BOLT HOLE COVER 906152001
17	7201077	1	DROP ROD ASSY	40	1010002199	1	SHELL CASING WELDED
16	1206210	1	NUT 3/8-16 NYLOCK	39	1612544	2	PLASTIC SUPPORT BLOCK
15	1210060	1	WASHER .390 X .750 X .050 NYLON	38	1910900	2	SLIDE 26" 477018 250LBS
14	1203405	1	BOLT 3/8 X 3/8 SOC SHLDR SS	37	3610462	2	BRACKET ADAPTER SLIDE
13	3380121	1	LINKAGE DRIVE ASSY STEP WELL	36	1612547	4	PLASTIC LIFTER CAM
12	3010002428	1	BRKT LIFTER ARM RH	35	1217511	2	SPRING .625 OD X .075 WIRE C 10 LG
11	3010002429	1	BRKT LIFTER ARM LH	34	1612568	2	WEAR PAD, PLASTIC DROP ROD BRKT
10	1602025	4	RUBBER BUMPER PAD 1/4 X 3/16 X 7/8	33	3354225	1	GEAR SUPPORT BEARING STEPWELL
9	1205950	4	NUT 5/16-18 SERRATED FLANGE	32	7204531	1	0.625" SHAFT, MOTOR PLATE
8	1203420	4	5/16-18 X 3/4" HH GR. 5	31	1612730	5	GUIDE BUTTON 24
7	1214630	20	RIVET 3/16X.250 (SB-64)	30	1216340	8	RING RETAINING 5/16" ROUND PUSH ON
6	1203010	18	BOLT 1/4-20 X 1/2" HH GR.5	29	1213239	8	PIN CLEVIS 5/16" X 2 1/4"
5	1209420	22	WASHER 1/4 SPLIT LOCK	28	1102015	1	BEARING 5/8" ID
4	3010002410	1	BRACKET FRONT END SUPPORT RH 29 7/8	27	1205600	14	NUT 1/4-20 HEX
3	3610178	1	FRAME, INTERIOR SUPPORT	26	1203040	6	BOLT 1/4-20 X 3/4 HH GR.5
2	3610177	1	FRAME SLIDER UPPER RISER	25	1205405	6	NUT 10-24 NYLOCK
1	3610176	1	FRAME SLIDER LOWER ELEC	24	1201390	6	SCREW #10-24 X 1 1/4 HWH SELFTAP

PLACE PART NUMBER 1612571 (ITEM 41) ON THE BOTTOM OF CAN AFTER ASSEMBLY. ALIGN THE CUTOUTS WITH THE ADJUSTMENT BOLTS INDICATED ABOVE (ITEMS 5 AND 6)

SIMILAR TO 906152001

DO NOT SCALE

Power Gear

MISHAWAKA, IN USA

POWER GEAR
JOEY BED
KODIAK
KWIKEE

PART NUMBER **9010000607**

REV. **0B**

UNITS: INCHES [mm]

SHEET 4 OF 4