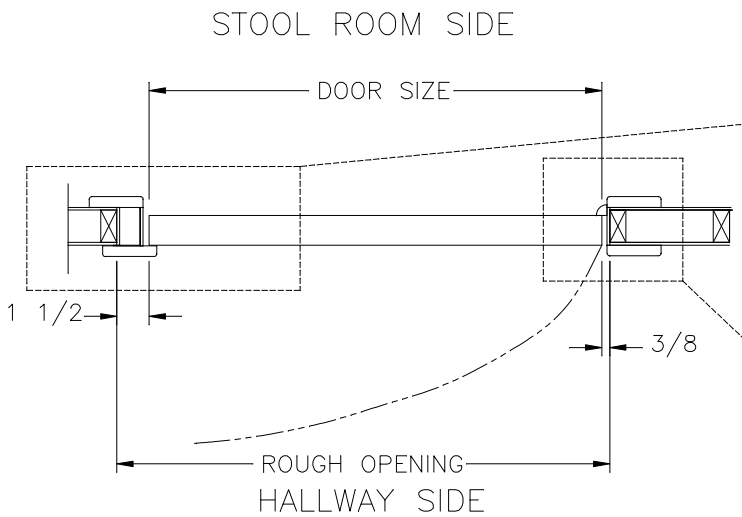

R.O.= DOOR WIDTH + 1 7/8"

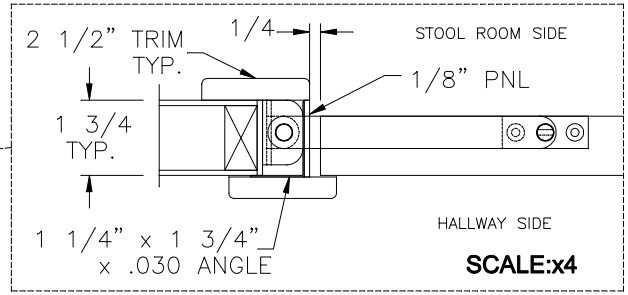

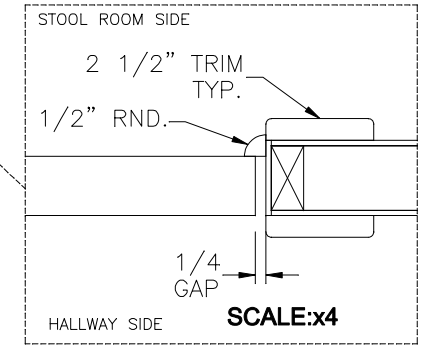

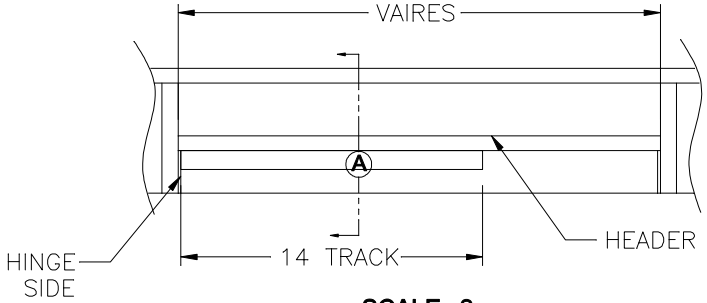

SCALE:x2

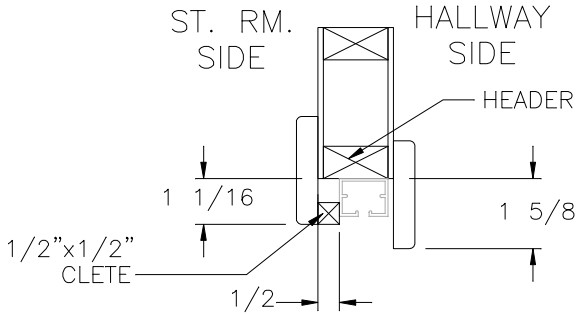

SIDE SECTION (A)

SCALE:x4

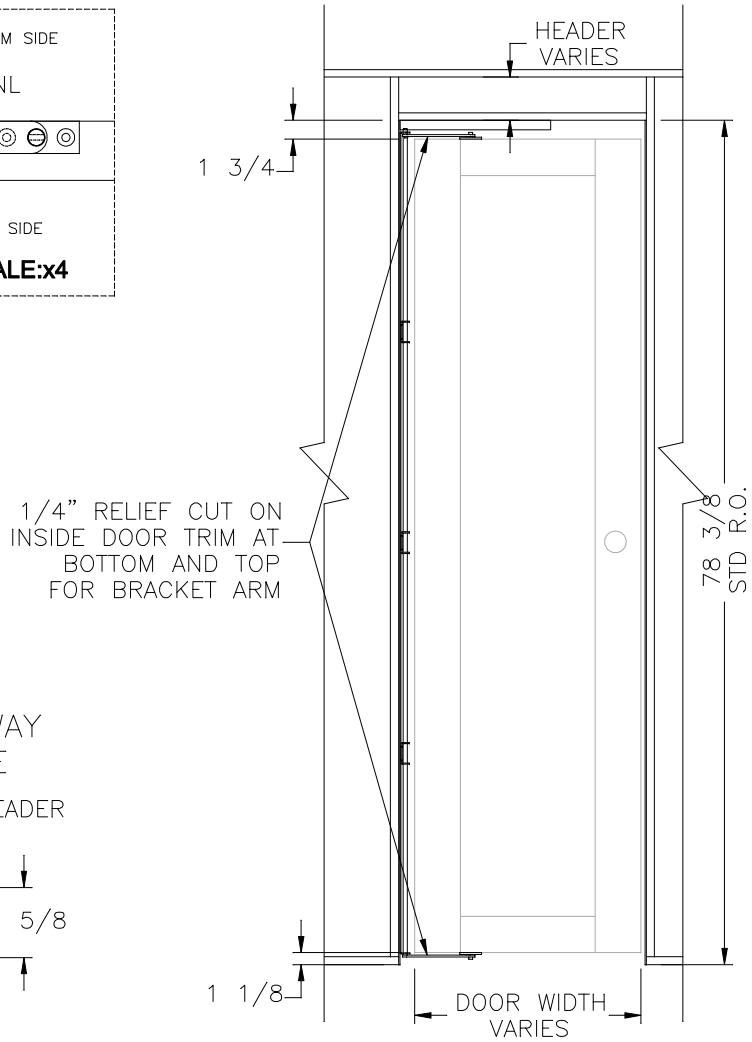

DOOR SIZE = 75 1/2" TALL

NEWMAR CORP *P.O. Box 30, Nappanee, IN. 46550*	Model: (SEE INDEX)	Sheet 1 OF 1	Drawn by: D. K.	Checked by: M. W.	Revision: REVISED DOOR HEIGHT DETAIL. DOOR HEIGHT AND R.O. HEIGHT NOW STANDARD.	By: D. K. Date: 2/6/13
Title block--1-5TB	Title: DOUBLE HINGE SWING DOOR DETAIL	I.D. # 2014\DP\CAB\WL\MISC7006	Date: 12/15/12	Date: 1/18/13	Revision: Revised R.O. calculation dimensions.	By: R. T. Date: 2/1/13