REV	DATE	ECN	DESCRIPTION
A	1-11-13	180	Initial Release

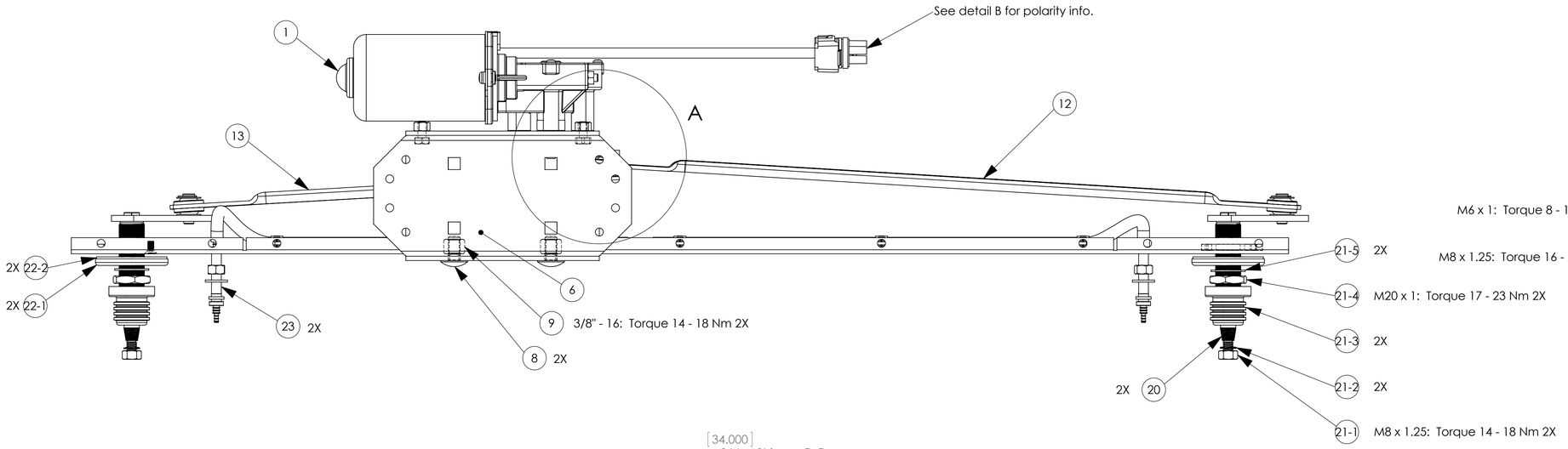

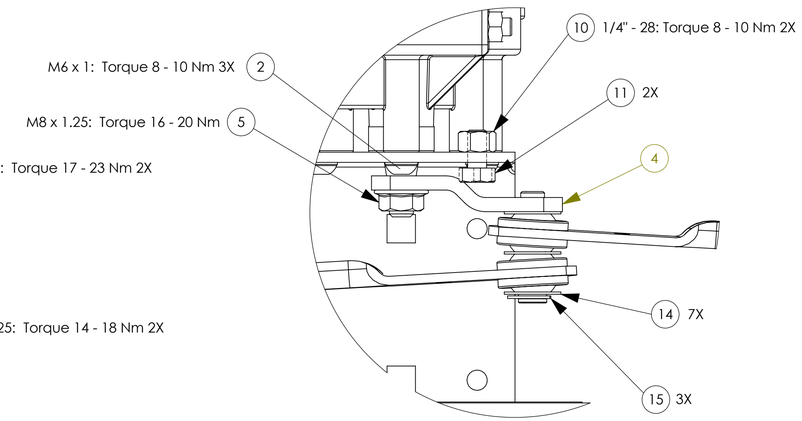

Detail C
SCALE 1:1
Shown without top bracket.

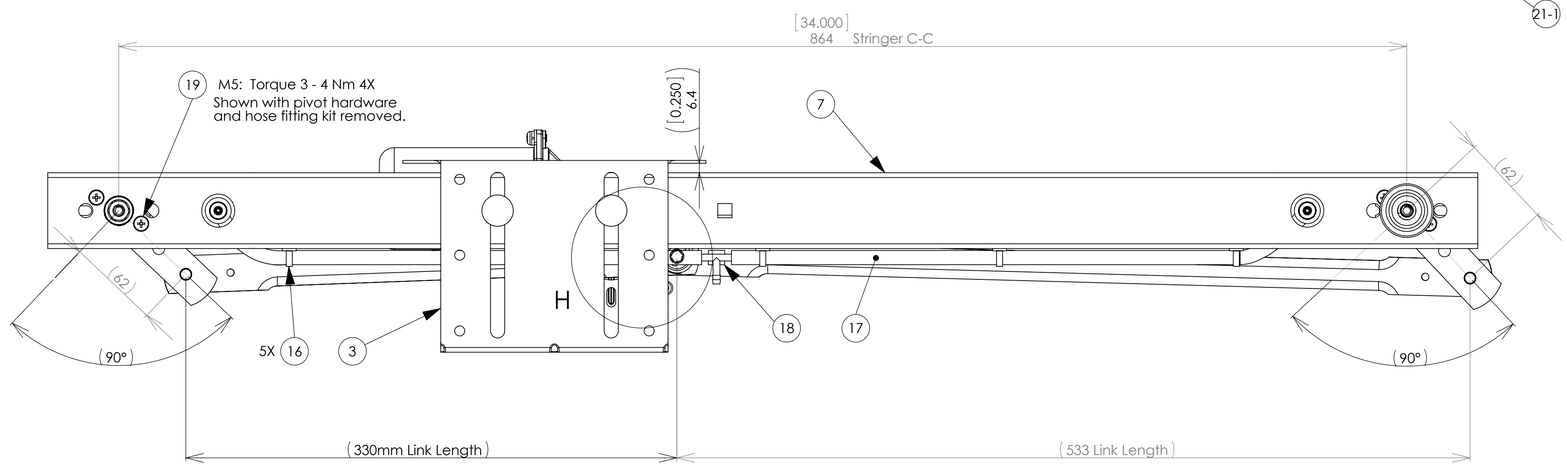

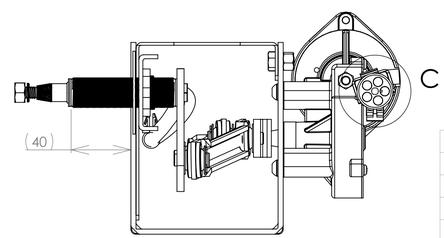

Shown with pivot hardware
and washer hose removed.

POS.	QTY.	PART NO.	DESCRIPTION
23	2	200255	Hose Fitting Kit
22-2	2	2002445	Rubber Gasket
22-1	2	2002448	Large OD 20mm Washer
21-5	2	300931	M20 Washer
21-4	2	300932	M20 X 1 Hex Nut
21-3	2	CA01127001	Rubber Cap
21-2	2	WA40805001	M8 Wavy Washer
21-1	2	NT00800001	M8 X 1.25 Hex Nut
20	2	PV11625001	Pivot Assembly, 1.5", R = 62 mm
19	4	300930	M5 Flathead Screw
18	1	19482	T Connector, hose
17	3'	19481	Washer Hose
16	5	19490	Hose Clip
15	3	RC19517001	E-Clip
14	7	WA01008001	M10 Washer
13	1	LK23306001	Link Assembly, 330 mm
12	1	LK25336001	Link Assembly, 533 mm
11	2	400236	1/4" - 28 x 1/2 UNF Hex Bolt
10	2	400238	1/4" - 28 UNF Elastic Hex Nut
9	2	400224	3/8" - 16 Hex Nut
8	2	400220	3/8 " - Carriage Bolt
7	1	400515	34" Stringer Bracket
6	1	400504	Top Bracket
5	1	400200	M8 x 1.25 Flange Hex Nut
4	1	CR12044001	Crank Arm, R=44 mm
3	1	400506	Motor Bracket
2	3	106800	M6 Button Head Screw
1	1	400.01100.5512WP	Motor, 12V, 55 Nm, Dynamic Park w/ Packard

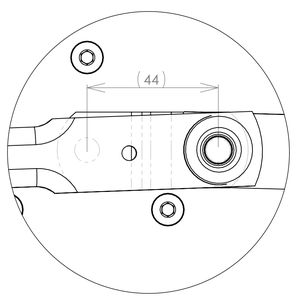

DETAIL H
SCALE 1 : 1
Motor Brackets and Stringer Hidden

CIRCUIT DIAGRAM

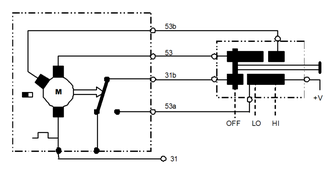

NOTES:

Wipe Angle: 90° Driver, 90° Passenger, No load.

Park Position: As shown, no load, cold motor @ 13.5V.

Motor is thermoswitch protected.

Motor rotation: CCW.

400515 Stringer lowered 1/4" from 400504 bracket.

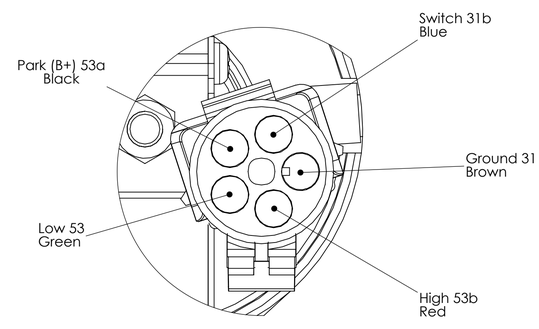

CONNECTOR
DETAIL C
SCALE 2 : 1

UNLESS OTHERWISE SPECIFIED:
DIMENSIONS ARE IN MM
TOLERANCES PER ISO 2768-1
CLASS M
3RD ANGLE PROJECTION

INTERPRET GEOMETRIC TOLERANCING PER:
MATERIAL DNA
FINISH DNA
APPLICATION

	NAME	DATE
DRAWN	JH	1-11-13
CHECKED	MP	1-14-13
ENG APPR.	MP	1-14-13

COMMENTS:

PROPRIETARY AND CONFIDENTIAL
THE INFORMATION CONTAINED IN THIS DRAWING IS THE SOLE PROPERTY OF WEXCO INDUSTRIES. ANY REPRODUCTION IN PART OR AS A WHOLE WITHOUT THE WRITTEN PERMISSION OF WEXCO INDUSTRIES IS PROHIBITED.

WEXCO Industries

TITLE:
Wiper Module

SIZE D | PART NO. 1000-3110071 | REV A

SCALE: | WEIGHT: | SHEET 1 OF 1

REV A | D 1000-3110071