ITEM #	QTY	NEWMAR #	DESCRIPTION
1	1	126271	HEADLIGHT BRACKET PASSENGER SIDE ADJ.
2	1	126272	HEADLIGHT BRACKET DRIVER SIDE ADJ.

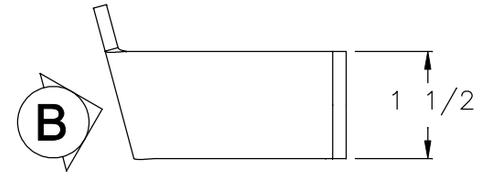

TOP

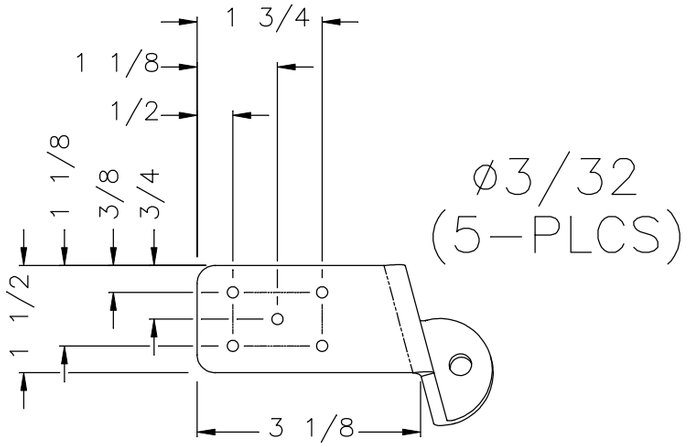

VIEW B

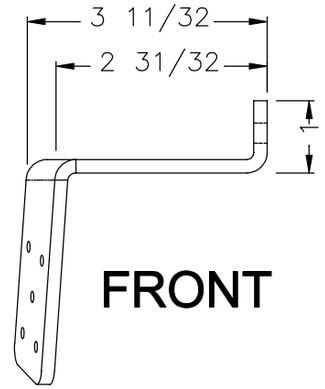

FRONT

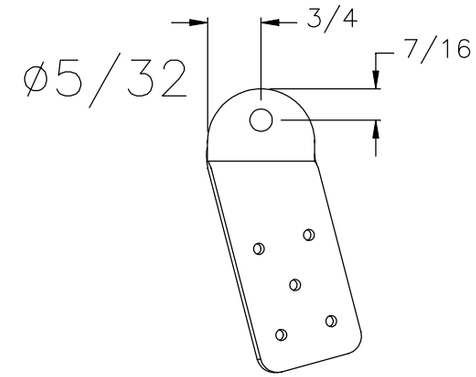

END

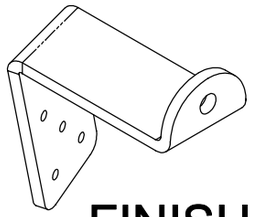

FINISHED

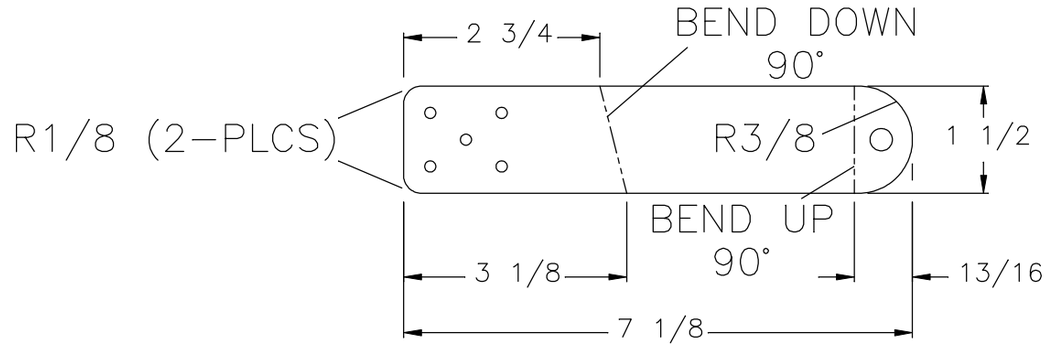

NOTE:
1. PASSENGER SIDE SHOWN DRIVER SIDE OPPOSITE
2. 12GA. POWDER COAT BLACK PASS. & DRV.

NEWMAR CORP P.O. Box 30, Nappanee, IN. 46550	Model: MA DP	Sheet 2 OF 2	Drawn by: B. G.	Checked by: D. K.	Revision:	By:
						Date:
UNITS: INCHES	Title: HEADLIGHT SUPPORT BRACKETS	I.D. # 2015\HE\PROFILE\MA\HEADLIGHT_BRKT	Date: 2/5/14	Date: 2/5/14	Revision:	By:
TITLE BLOCK: 5TB						Date: