ITEM #	QTY	NEWMAR #	DESCRIPTION
1	2	10950	1 x 1 X .062 ALUM. TUBE
2	1	64229	(1 x 2 ALUM. TUBE)
3	1	126571	DROP DOWN COCKPIT BUNK MECH.
4	1	126570	BUNK MATTRESS (30x77x3)

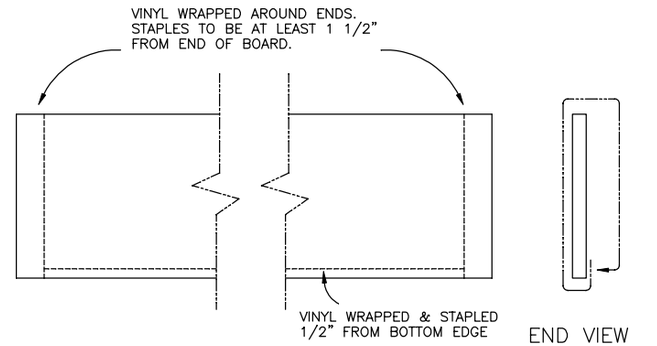

FACE
VIEWED FROM BACK SIDE
(SCALED 3X)

END VIEW
(SCALED 3X)

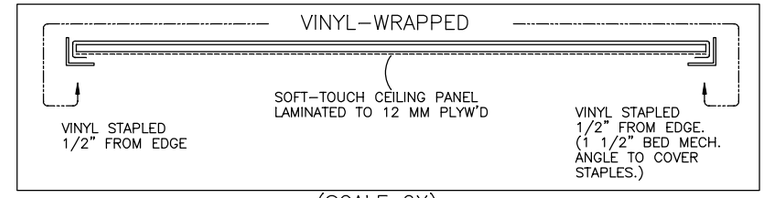

(SCALE 2X)

NOTE: 12 MM PLYW'D LUAN MUST BE USED

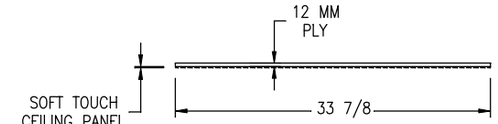

SECTION

FRONT OF COACH

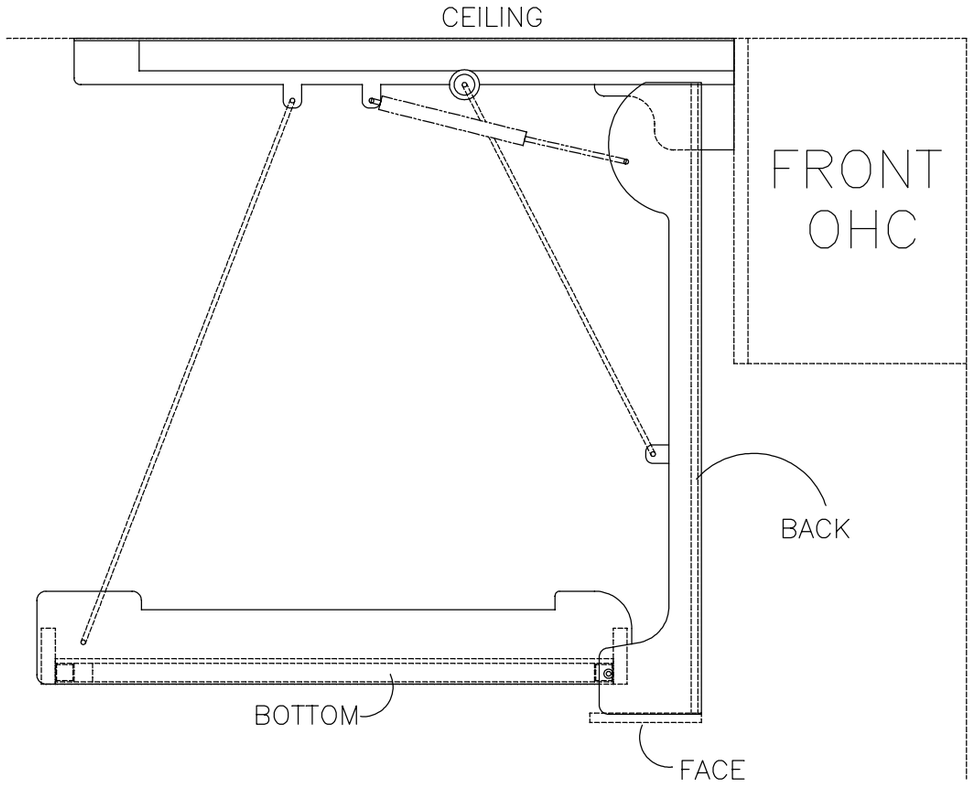

DROP DOWN BUNK
SIDE VIEW
(SCALED 2X)

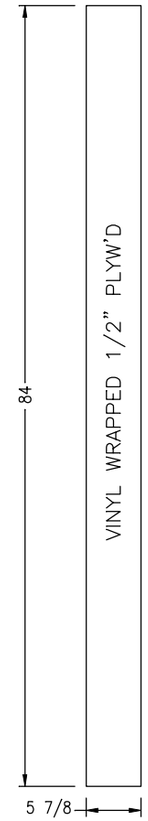

FACE

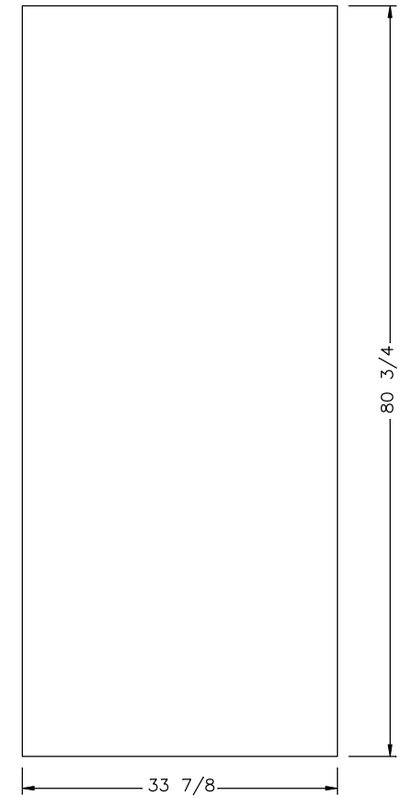

PLAN – BACK

NEWMAR CORP *P.O. Box 30,* *Nappanee, IN. 46550*	Model: (K925)(K926) BT,BS,CS (SEE INDEX)	Sheet 1 of 2	Drawn by: J. S.	Checked by: R. R.	Revision: Revised to use standard 12mm plyw'd ILO blue linx light weight	By: Z. R.
					(PCR #151280)	Date: 7/18/14
UNITS: INCHES	Title: DROP DOWN BUNK BED FRAME	I.D. # 2015\CA\CAB\LR\BB8000	Date: 1/30/14	Date: 1/30/14	Revision: ADD NOTE – 12 MM PLYW'D TO BE BLUE LINX LIGHT WEIGHT.	By: J. S.
TITLE BLOCK: 1TB						Date: 4/16/14

ITEM #	QTY	NEWMAR #	DESCRIPTION
1	2	10950	1 x 1 X .062 ALUM. TUBE
2	1	64229	(1 x 2 ALUM. TUBE)
3	1	126571	DROP DOWN COCKPIT BUNK MECH.
4	1	126570	BUNK MATTRESS (30x77x3)

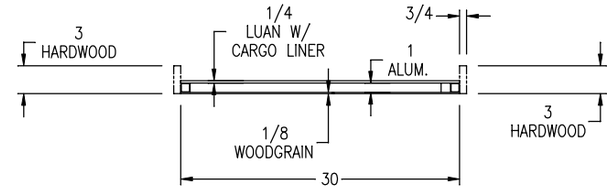

SECTION

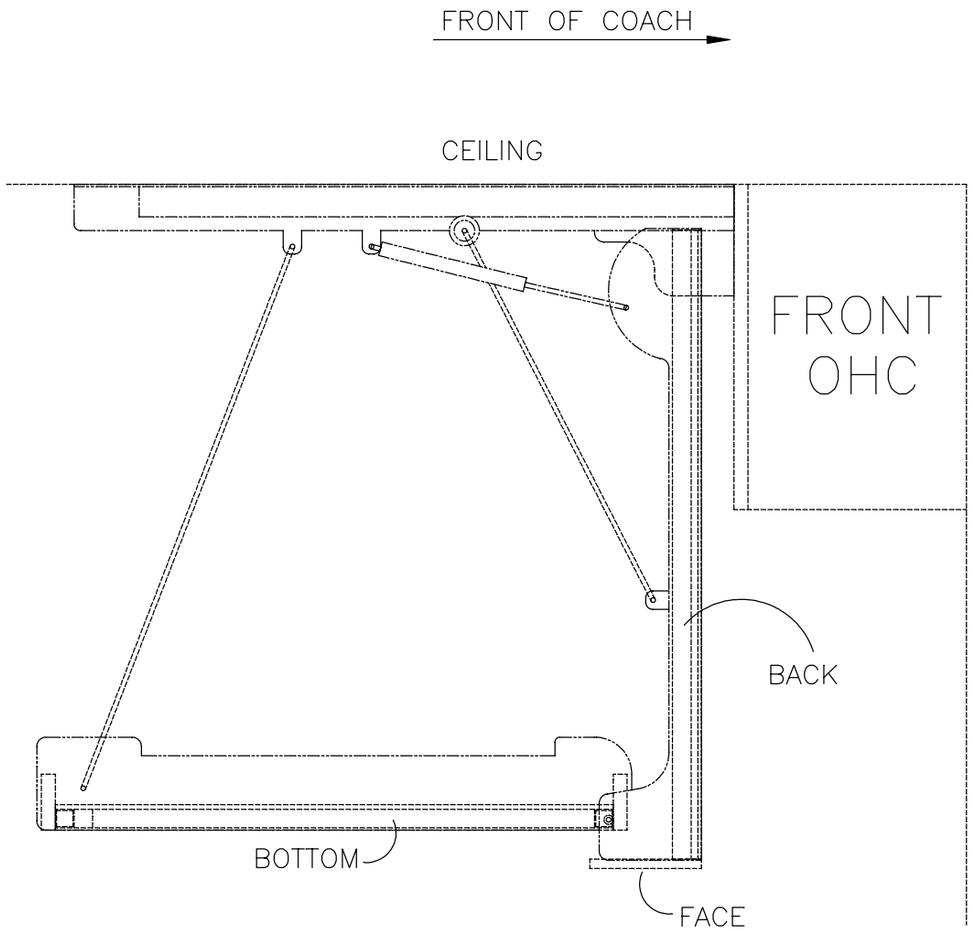

DROP DOWN BUNK
SIDE VIEW
(SCALED 2X)

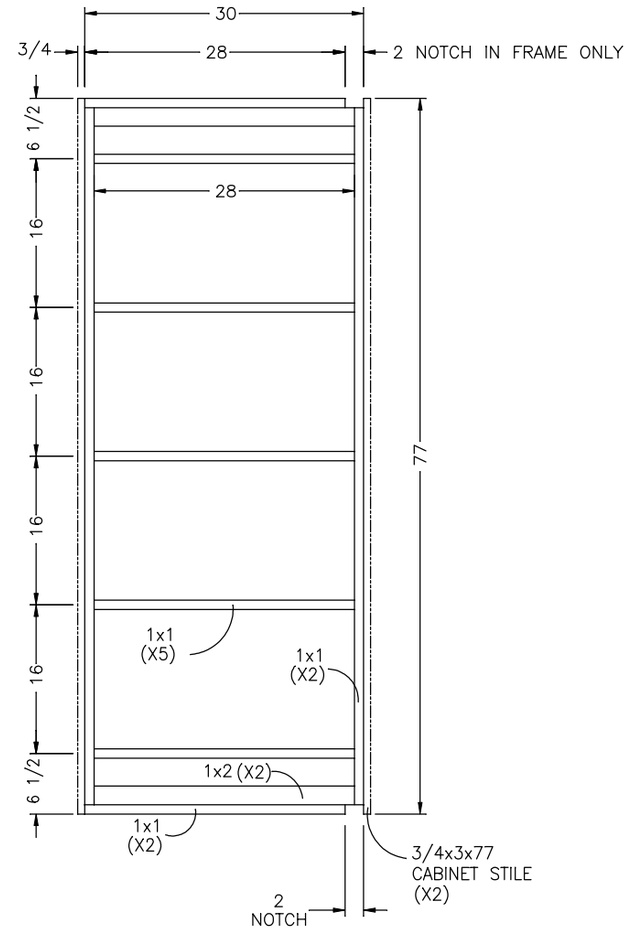

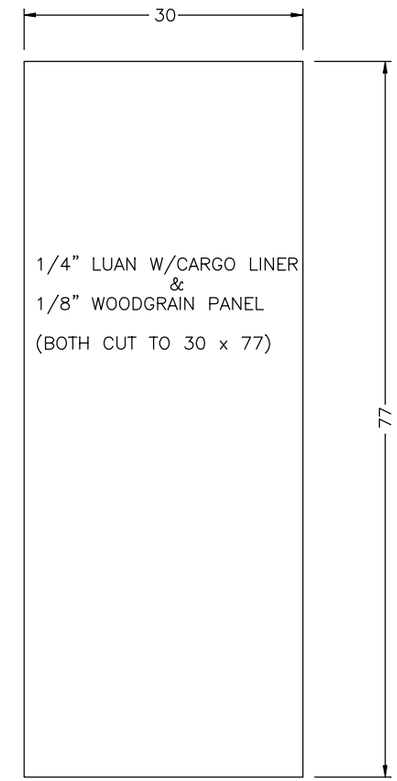

PLAN – BOTTOM

NEWMAR CORP P.O. Box 30, Nappanee, IN. 46550	Model: (K925)(K926) BT,BS,CS (SEE INDEX)	Sheet 2 of 2	Drawn by: J. S.	Checked by: R. R.	Revision: REVISE CABINET STILE NOTE TO 77 ILO 77 1/2.	By: J. S. Date: 3/28/14
UNITS: INCHES TITLE BLOCK: 1TB	Title: DROP DOWN BUNK BED FRAME	I.D. # 2015\CA\CAB\LR\BB8000	Date: 1/30/14	Date: 1/30/14	Revision: UPDATED PRINT WITH PART NUMBERS & ASSEMBLY DETAILS.	By: J. S. Date: 2/27/14