ITEM #	QTY	NEWMAR #	DESCRIPTION
A	1	122240	CABINET FOOT MAPLE CUT (HALF)
B	1	122241	CABINET FOOT MAPLE ANGLECUT 90
C	1	122242	CABINET FOOT MAPLE ANGLECUT 96
D	1	123061	CABINET FOOT MAPLE ANGLE CUT
E	1	123079	CABINET FOOT RAW MAPLE 98D CUT
F	1	127424	CABINET FOOT MAPLE FLAT CUT
G	1	127425	CABINET FOOT RAWMAPLE ANGL CUT
H	1	144002	CABINET FOOT RAWMAPLE 90D ANGL

PROFILE

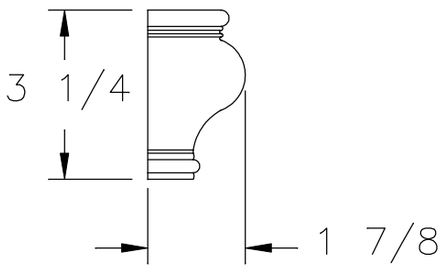

BLOCK "F"

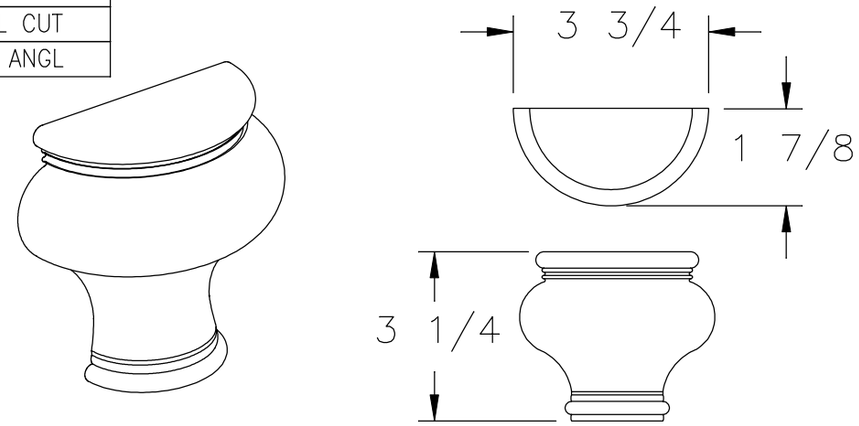

BLOCK "G"

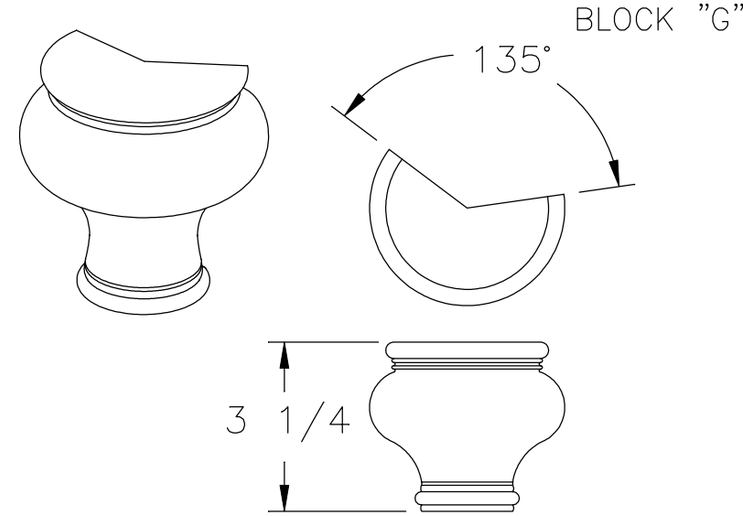

BLOCK "H"

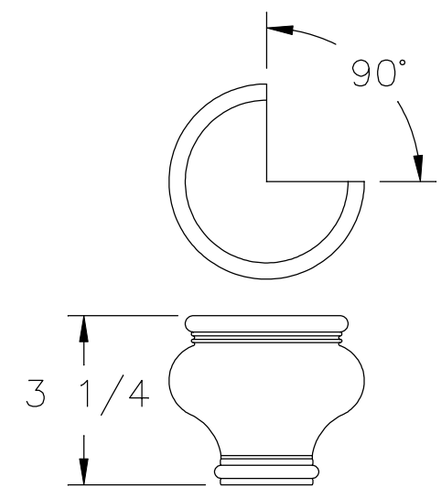

NEWMAR CORP P.O. Box 30, Nappanee, IN. 46550	Model: KS DP (TYPICAL)	Sheet 2 OF 2	Drawn by: D. E.	Checked by: B. B.	Revision:	By:
						Date:
UNITS: INCHES	Title: KITCHEN BASE CABINET FEET DETAIL	I.D. # 2020\DP\CAB\KT\MISC4001	Date: 8/1/18	Date: 11/15/18	Revision:	By:
TITLE BLOCK: 1-5TB						Date: