ITEM #	QTY	SHEET #	NEWMAR #	DESCRIPTION
1	1	1	127669	BRACKET W/ 3/8"-16 NUT

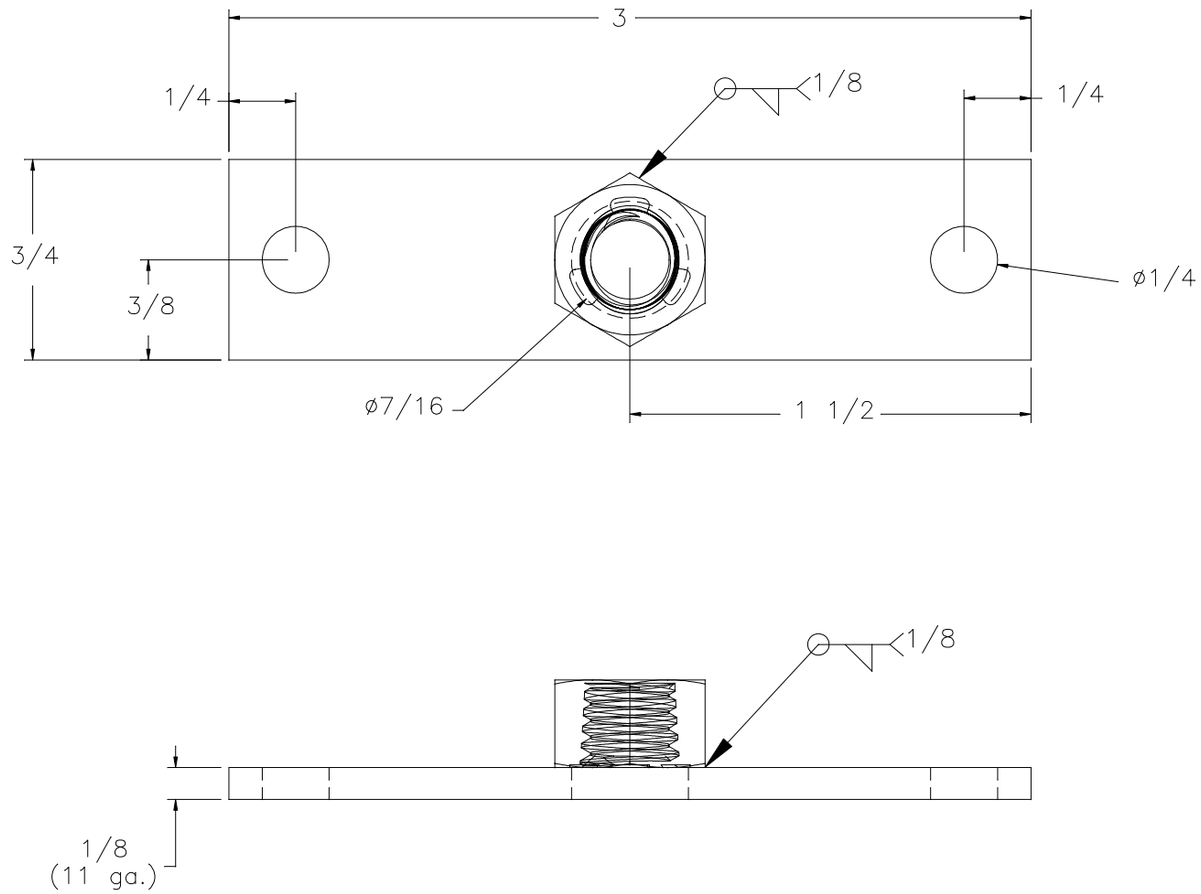

ITEM #1

NEWMAR CORP P.O. Box 30, Nappanee, IN. 46550	Model: (SEE INDEX)	Sheet 1 of 1	Drawn by: B. S.	Checked by: R. R.	Revision: REMOVED FROM ASSEMBLY PRINT.	By: B. S. Date: 11/25/15
UNITS: INCHES TITLE BLOCK: 1-2FULTB	Title: FLOOR/END WALL BRACKET	I.D. # SLIDE OUT\PARTS\ BRKT_127669	Date: 11/25/15	Date: 12/4/15	Revision:	By: Date: