ITEM #	QTY	NEWMAR #	DESCRIPTION
1	1	127690	14 GA. STAINLESS STEEL LH

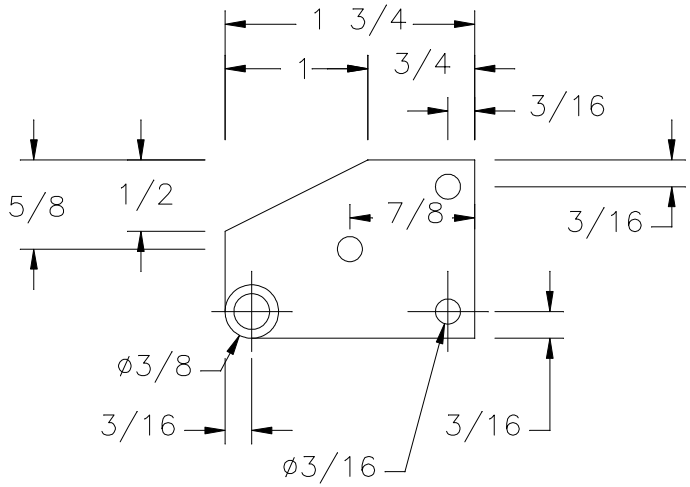

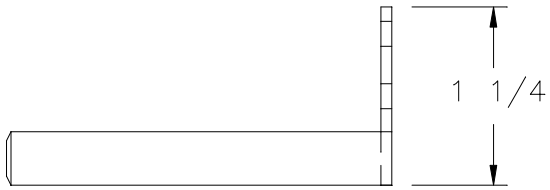

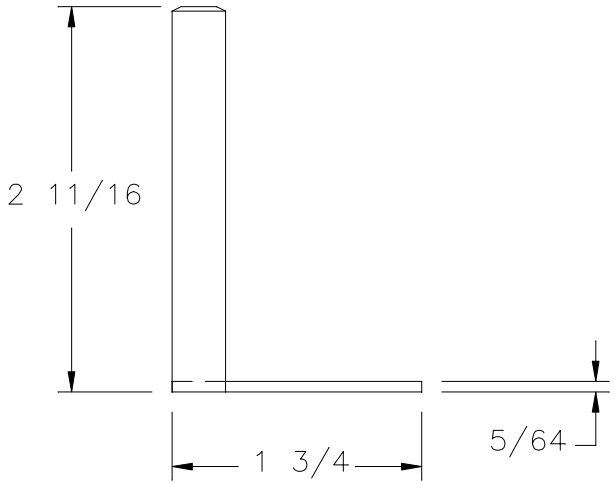

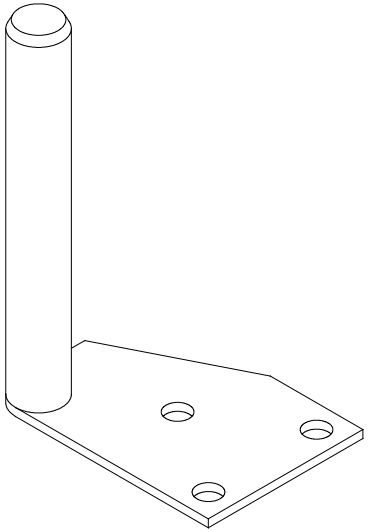

NEWMAR CORP P.O. Box 30, Nappanee, IN. 46550	Model: DSDP	Sheet 1 OF 2	Drawn by: M. W.	Checked by: M. W.	Revision:
Title block--1-2fulTB	Title: ENGINE DOOR PIN	I.D. # 2015\HE\FRAME\PARTS\ENGINE_DOOR_PINS_127690_127691	Date: 8/4/14	Date: 8/4/14	Revision: