ITEM #	QTY	SHEET #	NEWMAR #	DESCRIPTION
1	1	1	–	7GA. x 4 x 8.809 MILD STEEL CQ

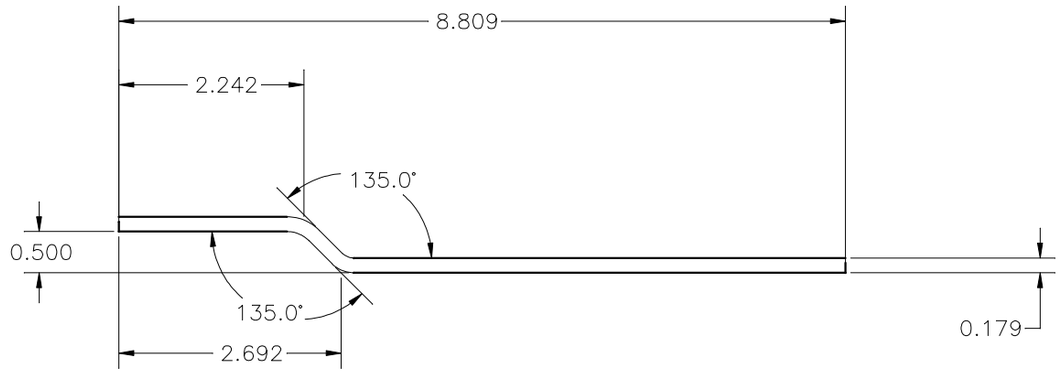

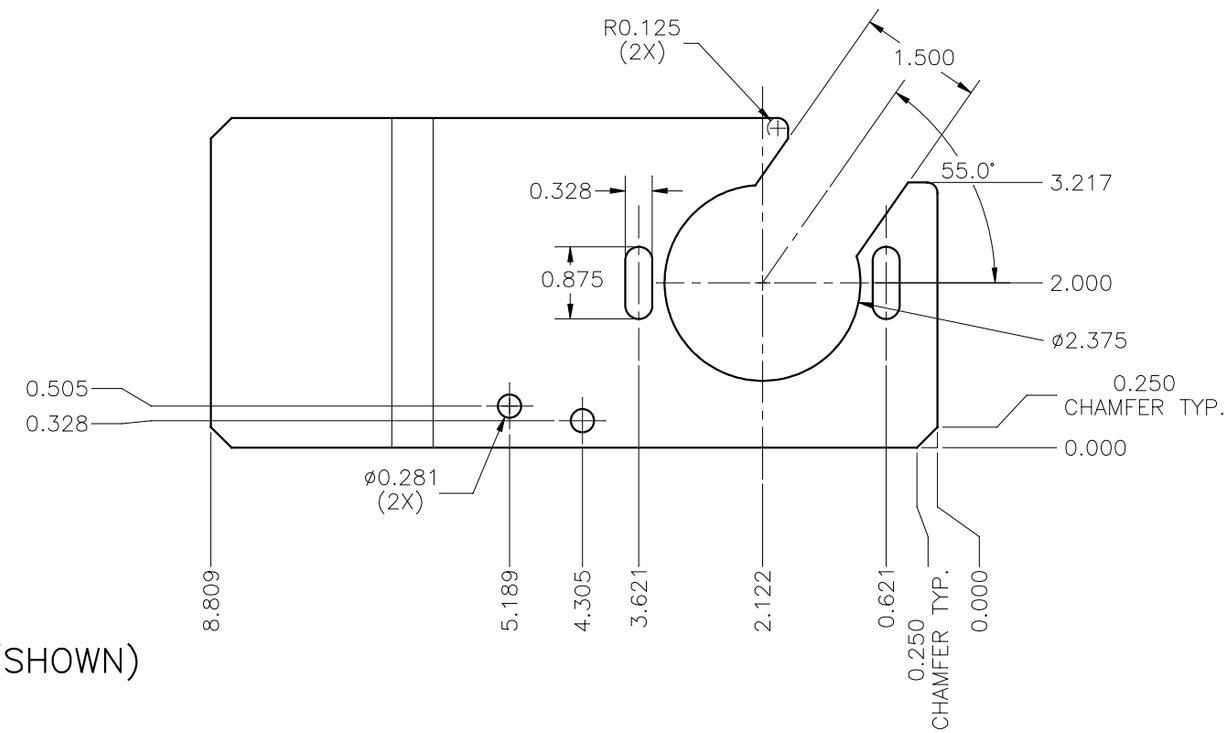

#128223–RIGHT HAND(SHOWN)
#128386–LEFT HAND

NEWMAR CORP P.O. Box 30, Nappanee, IN. 46550	Model: (SEE INDEX)	Sheet 1 OF 1	Drawn by: B. S.	Checked by: D. K.	Revision: ADDED 0,0 DIMENSION TO THE FRONT CORNER, AND ADDED LEFT HAND PART NUMBER. By: B. S. Date: 10/6/14
UNITS: INCHES	Title: 1" COG WHEEL BRACKET	I.D. # SLIDE OUT\PARTS\ BRKT_128223	Date: 9/23/14	Date: 10/16/14	Revision: By:
TITLE BLOCK: 1–2FULTB					Date: