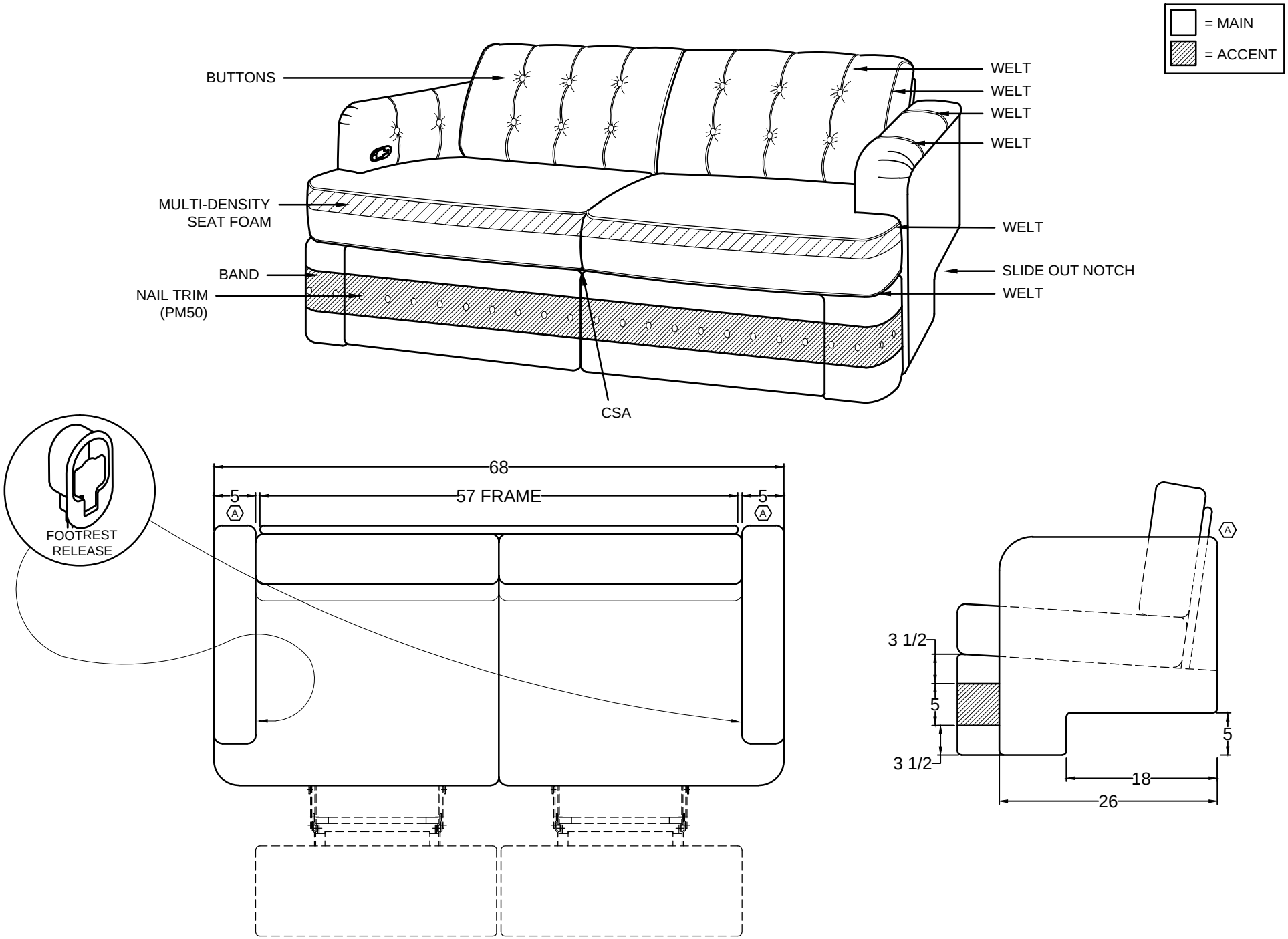

VILLA INTERNATIONAL
13760 Midway St.
Cerritos, CA 90703
Tel 562-404-8111
Fax 562-404-7781

TITLE	DWG. NO.	REV.	APV
2016 ESSEX CSA - 68" JACK KNIFE SLEEPER (SLIDE-OUT)	VI2000167	A	--
	DR J.ANCHETA	DATE 05.28.15	--

SCALE 1:1
DO NOT SCALE DRAWING.
UNLESS OTHERWISE SPECIFIED DIMENSIONS ARE IN INCHES.

THIS DRAWING IS THE PROPERTY OF VILLA INTERNATIONAL MFG. ALL RIGHTS RESERVED.

--	--		--
A.C.	A	REMOVED 3" GAP IN THE BACK. ARMS ARE NOW FLUSH WITH FRAME. (REF. ECO#026-2016)	04.26.16

REVISIONS