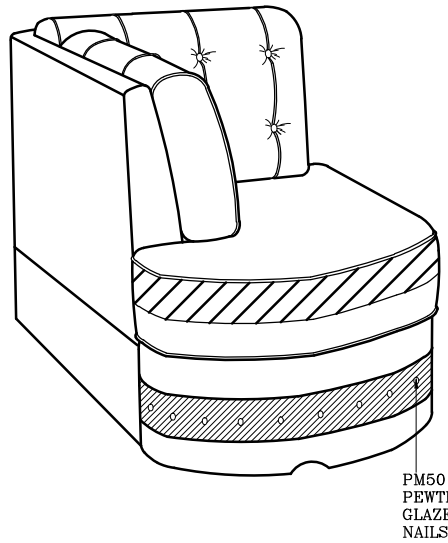

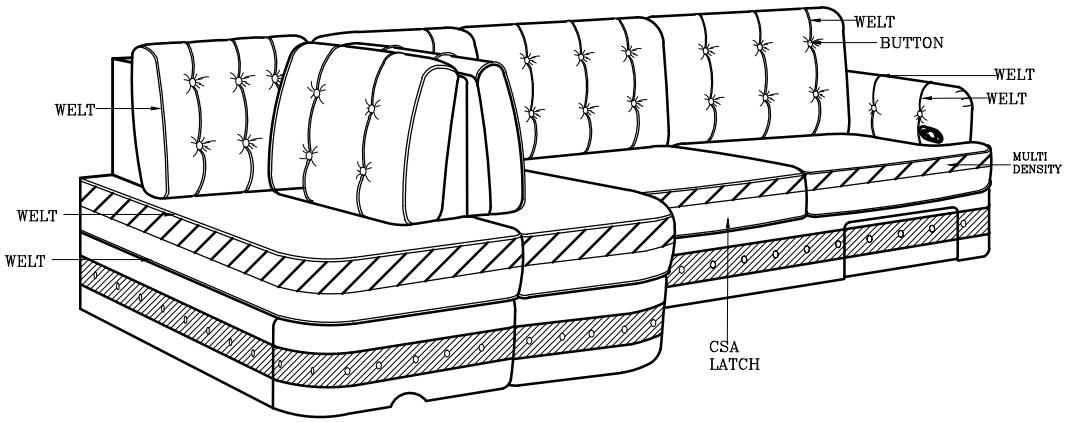

= MAIN

= ACCENT

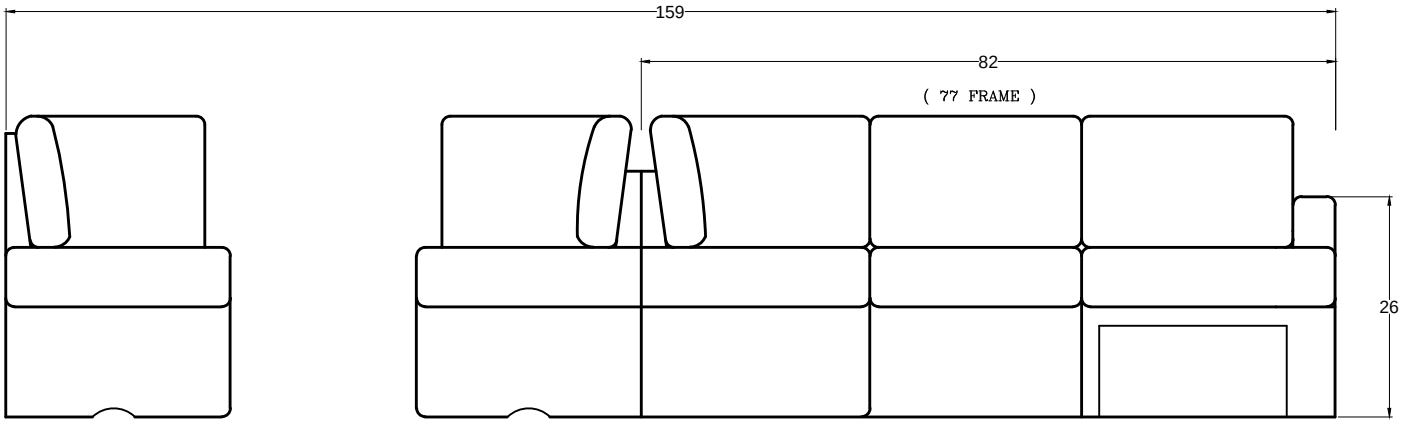

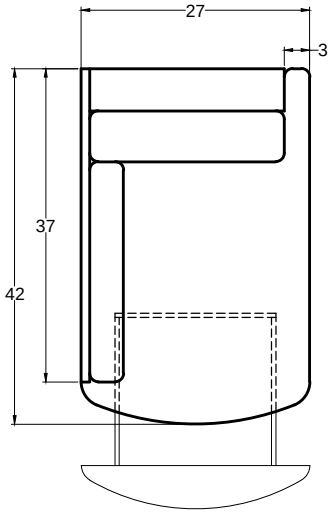

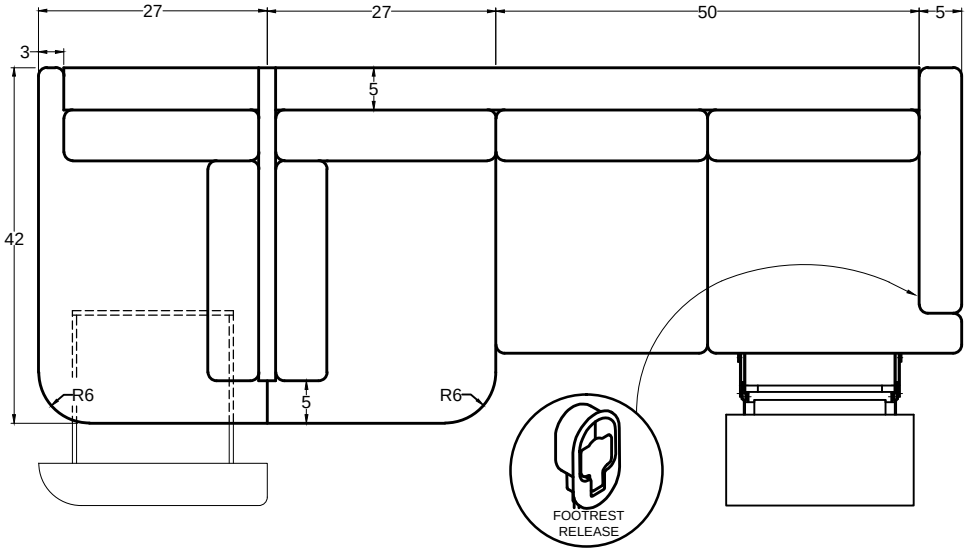

VILLA INTERNATIONAL
13760 Midway St.
Cerritos, CA 90703
Tel 562-404-8111
Fax 562-404-7781

TITLE
2016 ESSEX
CSA - 159" SOFA / F2F DINETTE
ENSEMBLE - SQUARED CORNERS

DWG. NO. VI3000081
REV. --
APV --
DR J.ANCHETA
DATE 04.23.15

SCALE 1:1
DO NOT SCALE DRAWING.
UNLESS OTHERWISE SPECIFIED DIMENSIONS ARE IN INCHES.

THIS DRAWING IS THE PROPERTY OF VILLA INTERNATIONAL MFG. ALL RIGHTS RESERVED.

REVISIONS