ITEM #	QTY	NEWMAR #	DESCRIPTION
1	1	–	3/16" x 1 13/16" x 7 1/2" PLATE
2	3	–	BEARING ROLLER
3	1	–	3/8-16 X 5 1/2" HEX BOLT
4	1	–	3/8-16 NYLON LOCK NUT

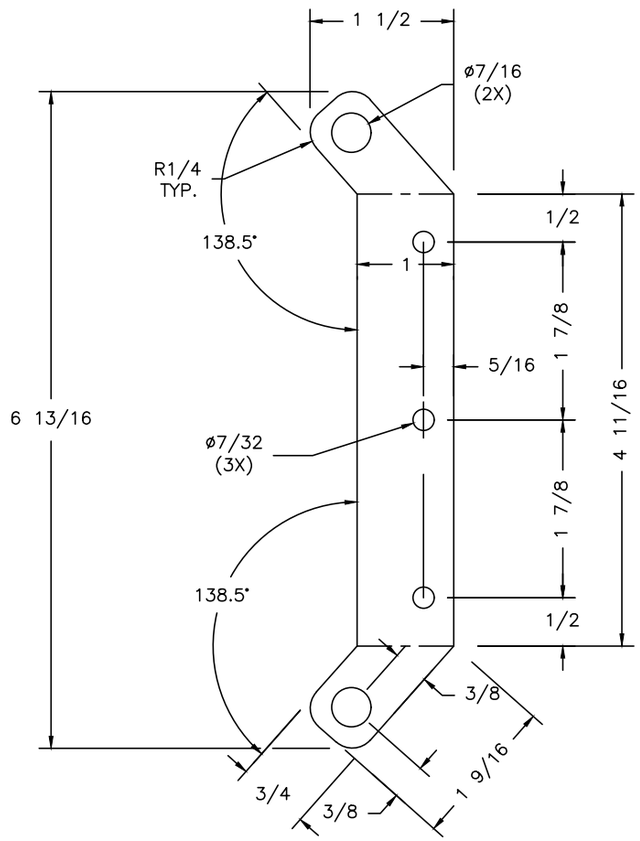

ITEM #1

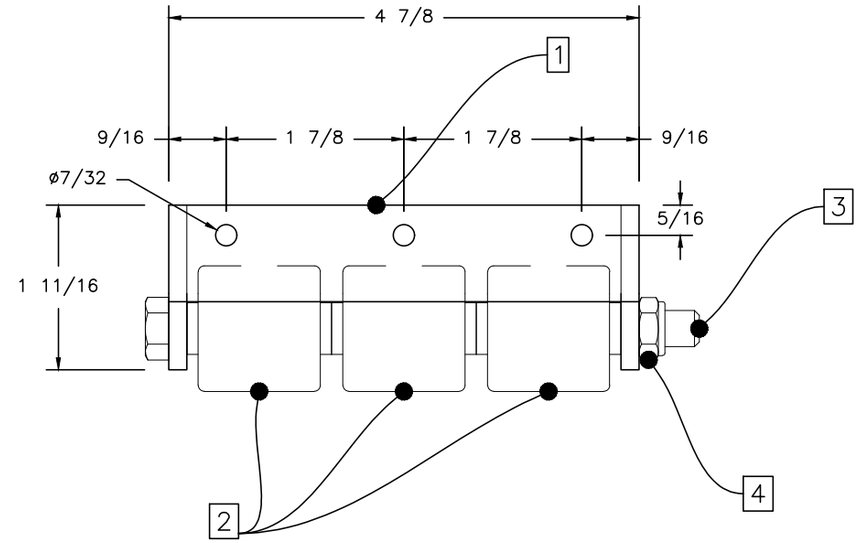

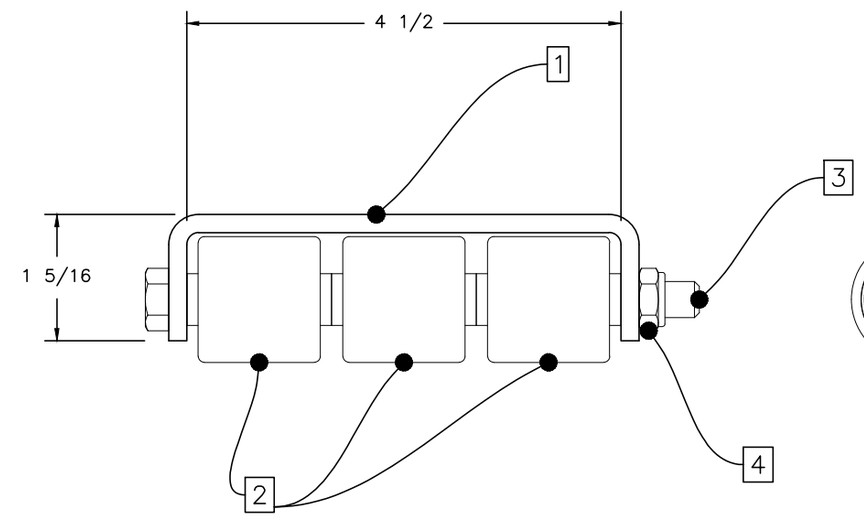

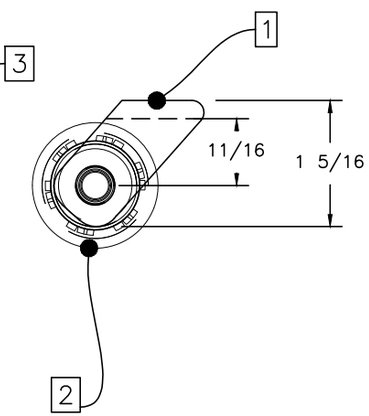

*NEWMAR #130332
*POWDER COAT BLACK

NEWMAR CORP P.O. Box 30, Nappanee, IN. 46550	Model: (SEE INDEX)	Sheet 1 OF 1	Drawn by: B. S.	Checked by:	Revision: REMOVED SUPPLIED BY NEWMAR IN THE PARTS LIST.	By: B. S. Date: 9/28/16
UNITS: INCHES TITLE BLOCK: 3125TB	Title: ROLLER BRACKET	I.D. # SLIDE OUT\PARTS\ ROLLER_130332	Date: 1/22/15	Date:	Revision: CHANGED HOLE DIAMETER FROM 3/16" TO 7/32"	By: R. C. T. Date: 3/2/15