REVISIONS			
		DESCRIPTION	
J.A.	A	CHANGED ARM HEIGHT TO 24"	03.04.15
A.C.	B	B1- CHANGED FROM 2-CUSHION TO 3-CUSHION B2 - FOOTRESTS CLOSER TO ARM (REF. ECO#017-2015)	04.01.15

= MAIN
= ACCENT

VI1000168-01
VI1000168-02
VI1000168-03
VI1000168-04
VI1000168-05
VI1000168-06
VI1000168-07
VI1000168-08
VI1000168-09
VI1000168-10

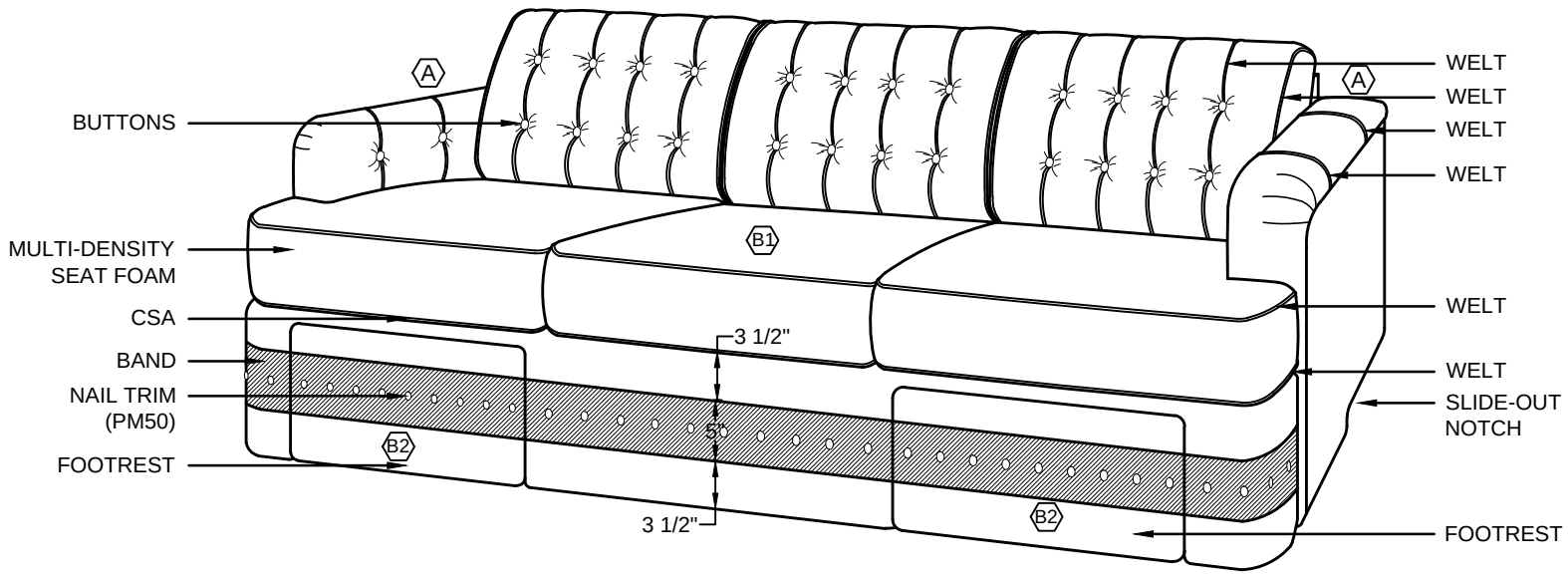

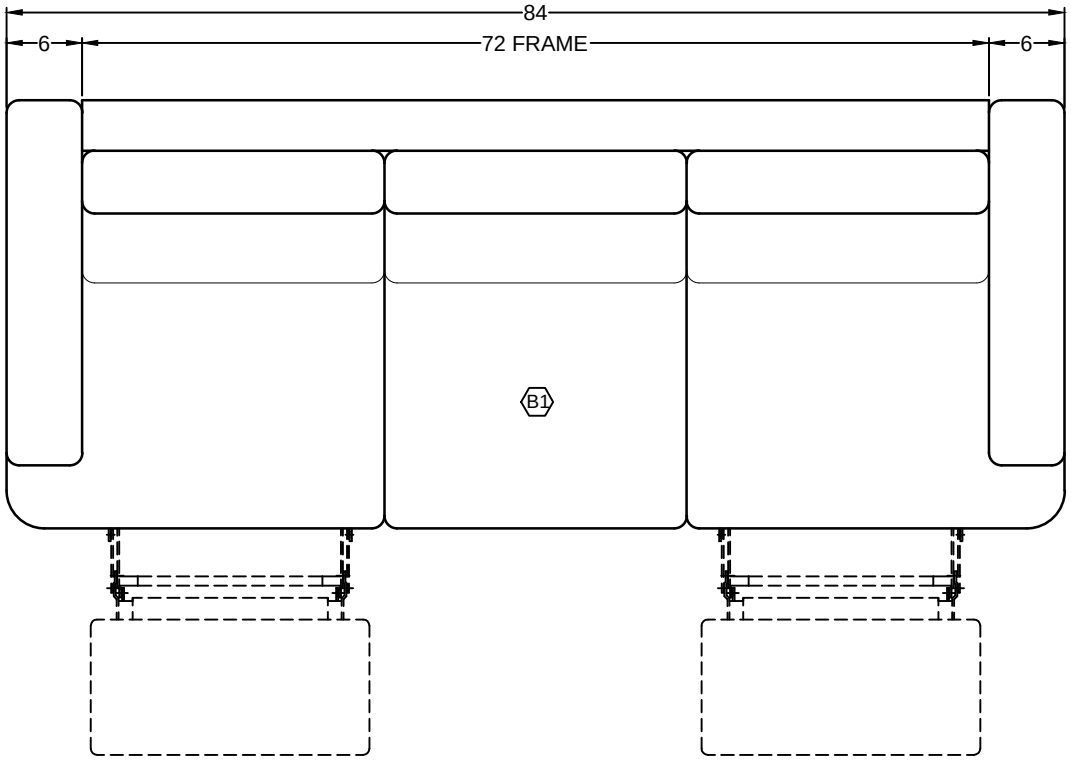

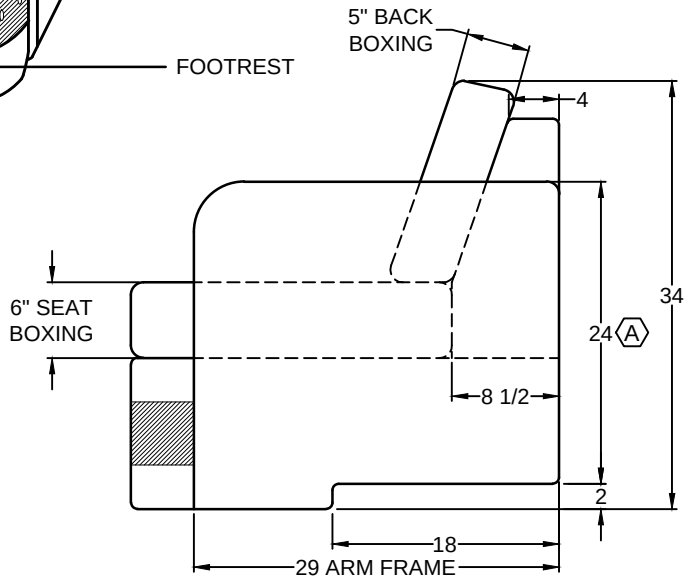

VILLA INTERNATIONAL
13760 Midway Street
Cerritos CA 90703
562-404-8111
Fax 562-404-7781

MAKE PATTERN: YES

UNLESS OTHERWISE SPECIFIED DIMENSIONS ARE IN INCHES

TOLERANCES:
DECIMALS
3 PLACE ± 0.005
2 PLACE ± 0.01
1 PLACE ± 0.1
FRACTIONS ± 1/16
ANGULAR ± 1°
DO NOT SCALE DRAWING

USED ON: X
NEXT ASSY: X

TITLE: 2016 ESSEX
CSA - 84" SOFA BED
(SLIDE-OUT WITH 2 FOOTRESTS)

DR: A.CERVANTES 02.19.15
CK:
APV:
SCALE 1:1
DWG. NO. VI1000168
REV. B

THIS DRAWING IS THE PROPERTY OF VILLA INTERNATIONAL MFG
ALL RIGHTS RESERVED.