ITEM #	QTY	NEWMAR #	DESCRIPTION
1	1	130759	UPPER OASIS EXHAUST COLLAR

14 GA. ALUMINUM POWDER COATED BLACK

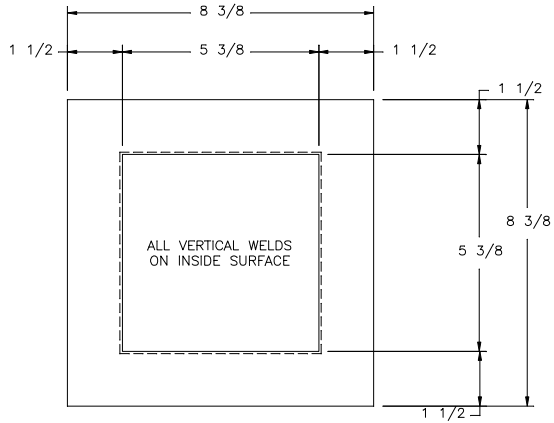

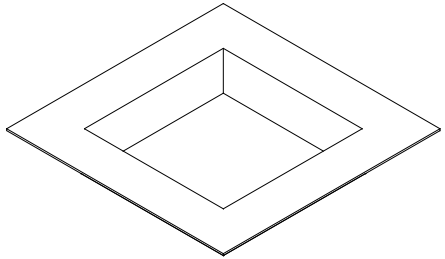

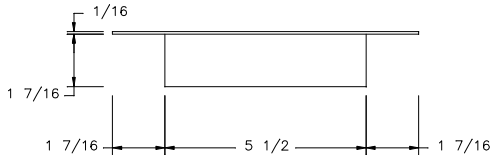

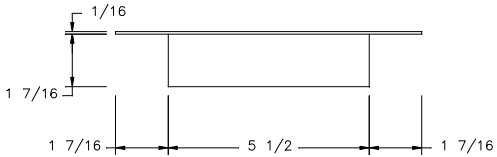

NEWMAR CORP P.O. Box 30, Nappanee, IN. 46550	Model: SEE PRINT INDEX	Sheet 2 OF 2	Drawn by: M. W.	Checked by: M. W.	Revision:	By: Date:
Title block--1-2fulTB	Title: UPPER OASIS EXHAUST COLLAR	I.D. # 2016\HE\FRAME\PARTS\BEZEL_130758_130759	Date: 2/27/15	Date: 2/27/15	Revision:	By: Date: