ITEM #	QTY	NEWMAR #	DESCRIPTION
1	1	132038	BRKT WHEELCHAIR LOCK-OUT

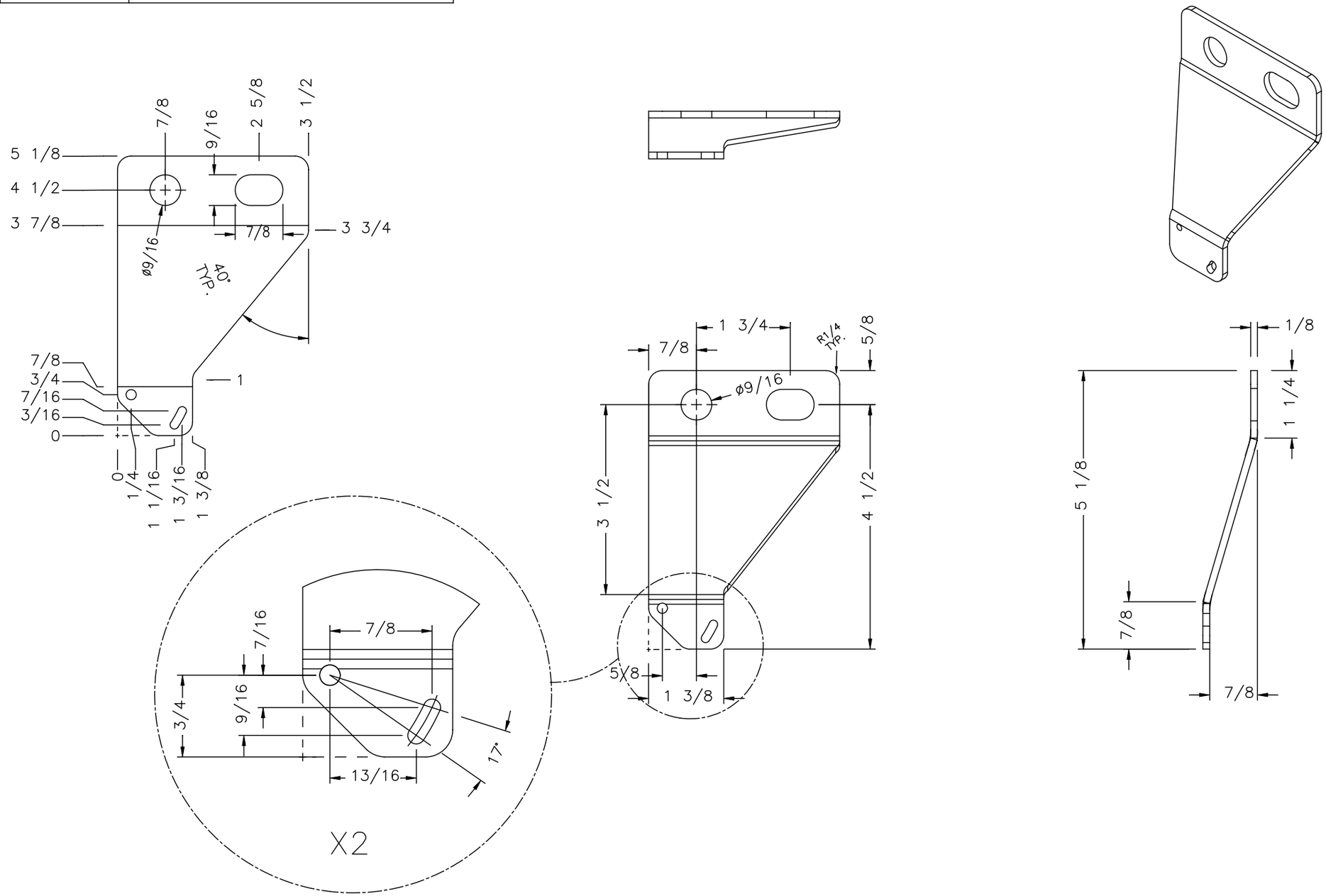

NEWMAR CORP P.O. Box 30, Nappanee, IN. 46550	Model: BSCA 3811	Sheet 1 OF 1	Drawn by: C. C.	Checked by: D. E.	Revision:	By:
						Date:
UNITS: INCHES	Title: WHEEL CHAIR LIFT TRANSMISSION PARK SWITCH	I.D. # 2023\CA\FRAME\PARTS\WHLCHR_TRNS_BRKT	Date: 3/18/22	Date: 5/18/22	Revision:	By:
TITLE BLOCK: 1-2FULTB						Date: