| ITEM # | QTY | SHEET # | NEWMAR # | DESCRIPTION |
|---|---|---|---|---|
| 1 | 1 | 1 | – | 5/16" x 6.684" x 7.484" Flat |
| 2 | 2 | 1 | – | 7/8" Round bar x 1.250A–36 w/Hole |
| 3 | 2 | 1 | 105821 | 1/2"–13 x 6" Thr'd Rod Grade 5 ZP |
| 4 | 4 | 1 | 11801 | 1/2"–13 Hex Nut Grade 5 ZP |
| 5 | 2 | 1 | 71344 | PSO Bearing Axial EDP DSKIT – SO |
| 6 | 2 | 1 | 105822 | 7/32" D. Coiled Spring Pins x 1" Lg. |
| 7 | 2 | 1 | xxxxx | FLAT HEAD SOLID RIVETS (MCMASTER #97032A389) |

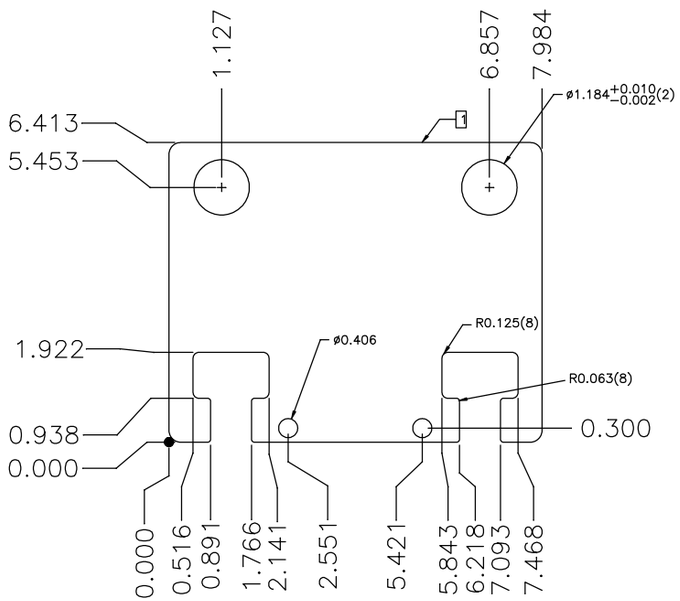


Bearing Plate Blank

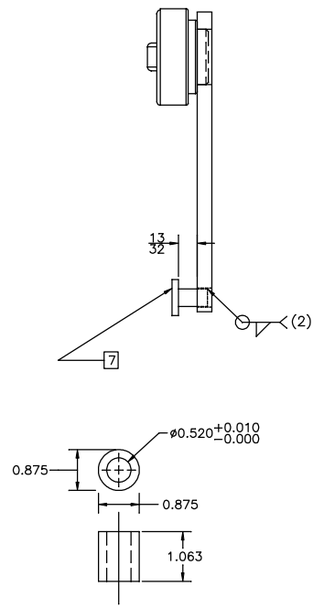


Detail Item #2

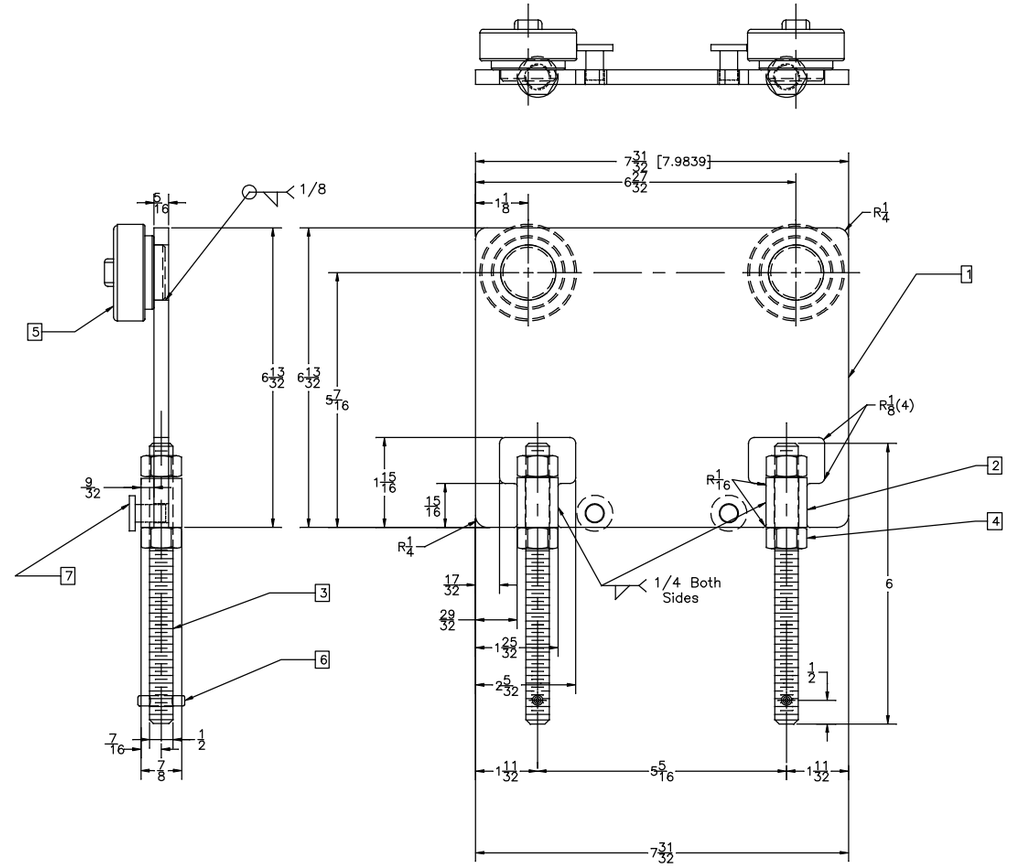


Newmar #132044

Note:
Paint Black
Item #3,#4,#5,&#6 To be installed by Newmar
Plate & Flat Mat'l: 1018–1020 HRPQ CQ

| | | | | | | |
|---|---|---|---|---|---|---|
| NEWMAR CORP<br>P.O. Box 30,<br>Nappanee, IN. 46550 | Model: (SEE INDEX) | Sheet<br>1 of 1 | Drawn by:<br>B. S. | Checked by:<br>J. K. | Revision: | By: |
| | | | | | | Date: |
| UNITS: INCHES | Title: UNIVERSAL BEARING BRACKET | I.D. # SLIDE OUT\PARTS\ BRKT_132044 | Date:<br>7/14/15 | Date:<br>8/8/19 | Revision: | By: |
| TITLE BLOCK: 1–2FULTB | | | | | | Date: |