ITEM #	QTY	NEWMAR #	DESCRIPTION
1	1	132229	BATTERY BOX–22 GA. GALV.

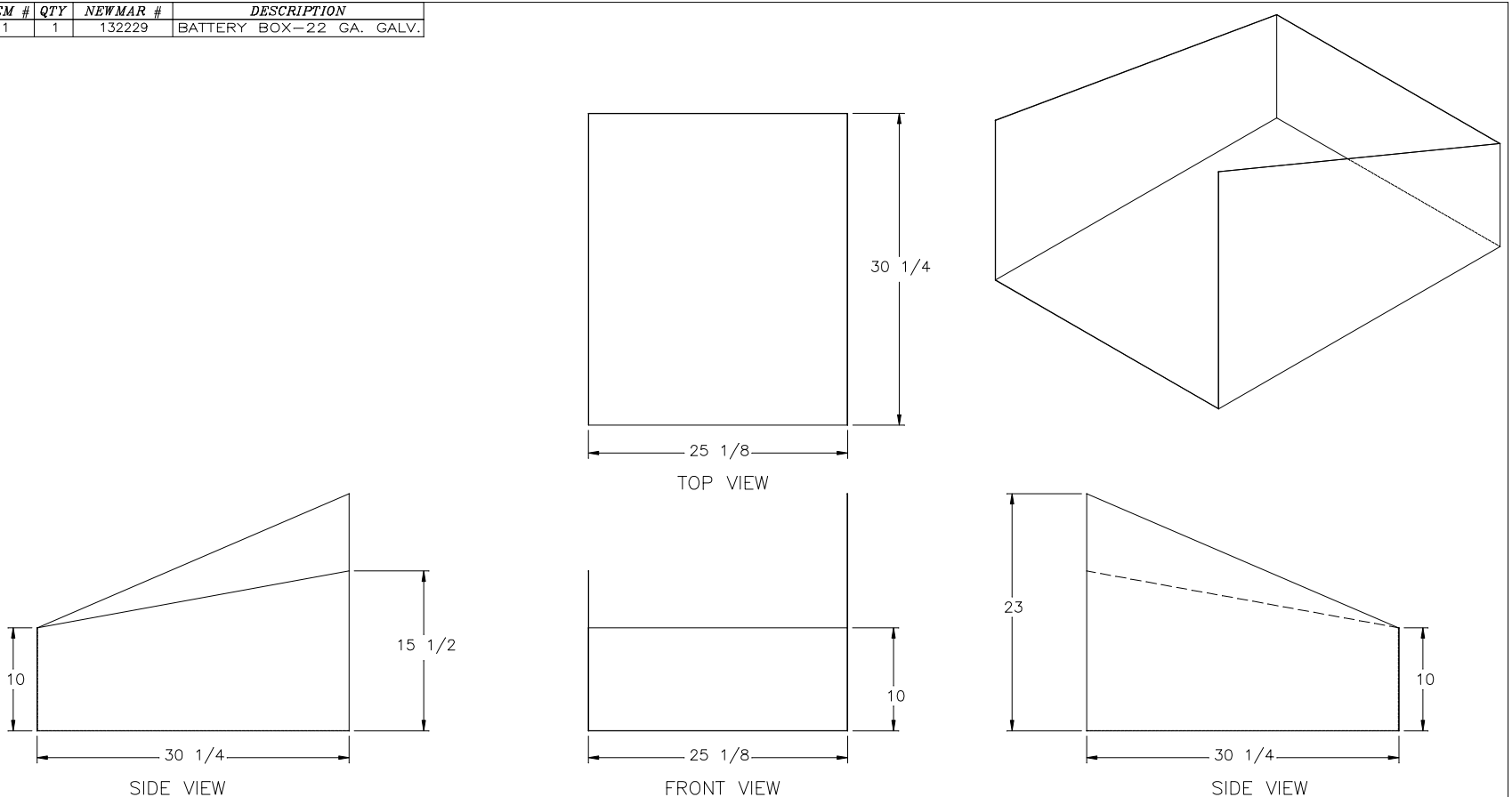

NEWMAR CORP **P.O. Box 30,** **Nappanee, IN. 46550**	Model: (SEE INDEX)	Sheet 1 OF 1	Drawn by: T. S.	Checked by: M. W.	Revision: CHANGED FORWARD WALL TO 15 1/2 ILO 17 (ECO #289)	By: T. S. Date: 9/8/15
Title block--75TB	Title: BATTERY BOX 6 BATTERIES	I.D. # 2016\DP\FRAME\PARTS\BB_132229	Date: 8/21/15	Date: 8/25/15	Revision: CREATED NEW DRAWING (ECO #289)	By: T. S. Date: 8/21/15