PART NUMBER	ITEM 1 BRACKET (QTY)	ITEM 2 ACTUATOR (QTY)	ITEM 3 ROD (QTY)	ITEM 4 CLIP (QTY)	ITEM 5 SCREW (QTY)	PART MARKING 3
36313-01	36248-01 (1)	33990-03 (1)	36247-01 (1)	81387 (1)	19935-01 (2)	36313

REVISION	ECN	ECN BY	DESCRIPTION
A	PRE-RLSE	BJP 8/21/15	CREATED
B	PRE-RLSE	BJP 9/9/15	REVISED VIEWS
1	RLSE	BJP 9/14/15	RELEASED FOR PRODUCTION

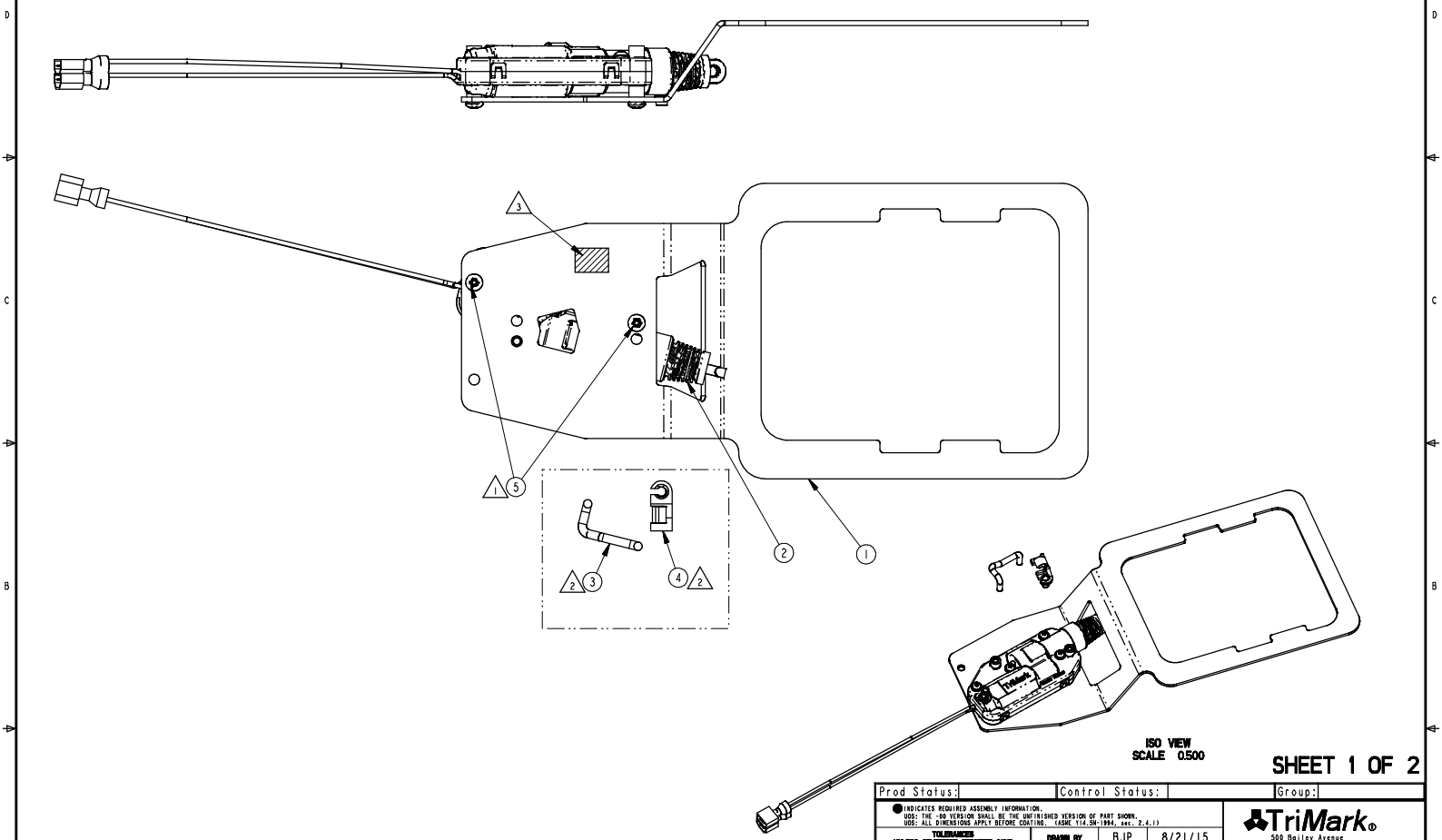

ISO VIEW
SCALE 0.500

SHEET 1 OF 2

NOTES: UNLESS OTHERWISE SPECIFIED:

1. FASTENERS (ITEM 5) MUST NOT EXCEED 25 IN-LBS OF TORQUE DURING INSTALLATION.
2. SEAL ROD (ITEM 3), CLIP (ITEM 4) IN THE CORNER OF THE BAG.
3. LABEL TO BE MARKED WITH PART NUMBER AND DATE CODE. LOCATE APPROXIMATELY AS SHOWN.

Prod Status: | Control Status: | Group:

INDICATES REQUIRED ASSEMBLY INFORMATION.
UOS: THE -00 VERSION SHALL BE THE UNFINISHED VERSION OF PART SHOWN.
UOS: ALL DIMENSIONS APPLY BEFORE COATING. (ASME Y14.5M-1994, sec. 2.4.1)

TOLERANCES UNLESS OTHERWISE SPECIFIED (UOS)
ASME Y14.5M-1994

INCH	MILLIMETER
X.X ±.1	X ±.3
X.XX ±.03	X.X ±.8
X.XXX ±.010	X.XX ±.25

ANGLES
X° ±5°
X.X° ±1.0°
X.XX° ±.50°

DO NOT SCALE DRAWING

REF. T/M QP 4.20-2 FOR SUP. QUALITY REQ.
REF. T/M QP 4.20-3 FOR INT. QUALITY REQ.

DRAWN BY	BJP	8/21/15
CHECKED BY		
PROJECT 150104	PRODUCT CODE K03 (100-0400)	
CUSTOMER		
CUSTOMER PART NUMBER		
PART WEIGHT (1.072 LBS)	SURFACE AREA (165.205 IN^2)	

TriMark®
500 Bailey Avenue
P. O. Box 350
New Hampton, Iowa 50659 U.S.A.
Tel: 641-394-3188
Fax: 641-394-2392

This drawing and the information contained herein is the property of TriMark Corporation and shall not be used for any purpose without our written consent.

DESCRIPTION: KIT,POWER,LH,(030-0850)

SIZE	SCALE	PART NUMBER
C	0.8	36313