ITEM #	QTY	NEWMAR #	DESCRIPTION
1	1	132693	BRKT CAMERA PLUG HITCH SPARTAN

FINISH: BLACK POWDER COAT

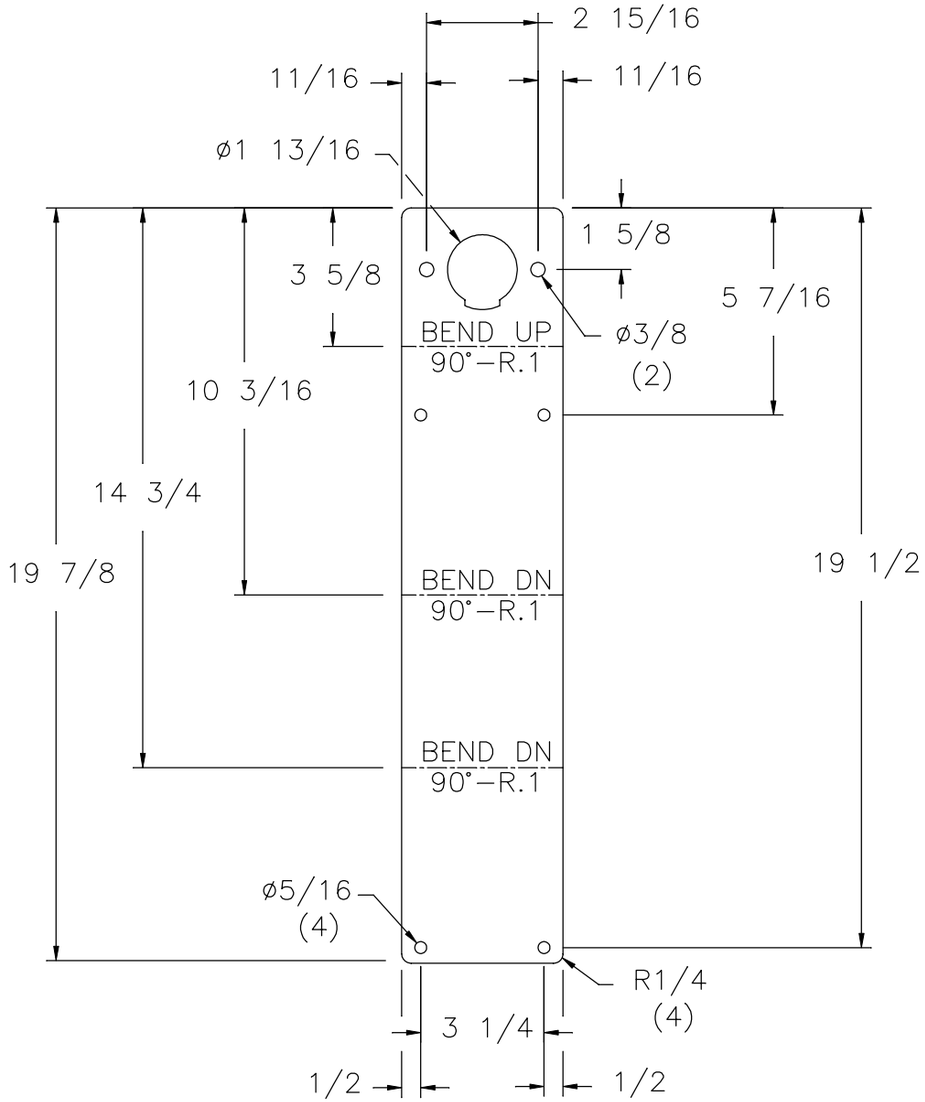

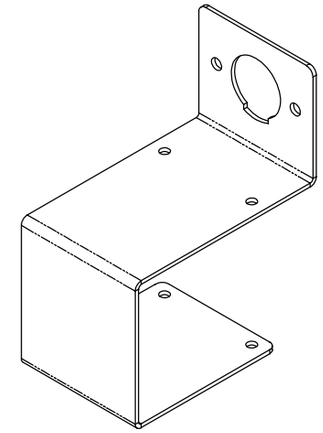

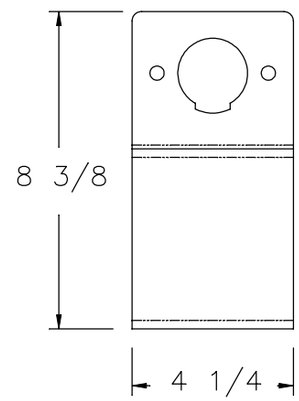

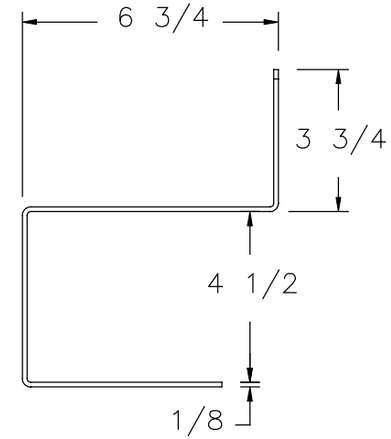

NEWMAR CORP P.O. Box 30, Nappanee, IN. 46550	Model: KGDB	Sheet 3 OF 3	Drawn by: F. S.	Checked by: D. K.	Revision: CREATED PRINT FOR 2017	By: F. S.
						Date: 1/21/16
UNITS: INCHES	Title: CAMERA PLUG BRACKET–SPARTAN	I.D. # 2017\HE\FRAME\PARTS\CAMERA_PLUG_BKTS	Date: 1/20/16	Date: 1/27/16	Revision:	By:
TITLE BLOCK: 1TB						Date: