ITEM #	QTY	NEWMAR #	DESCRIPTION
2	2	132819	1/16 STEEL–POWDER COATED BLACK

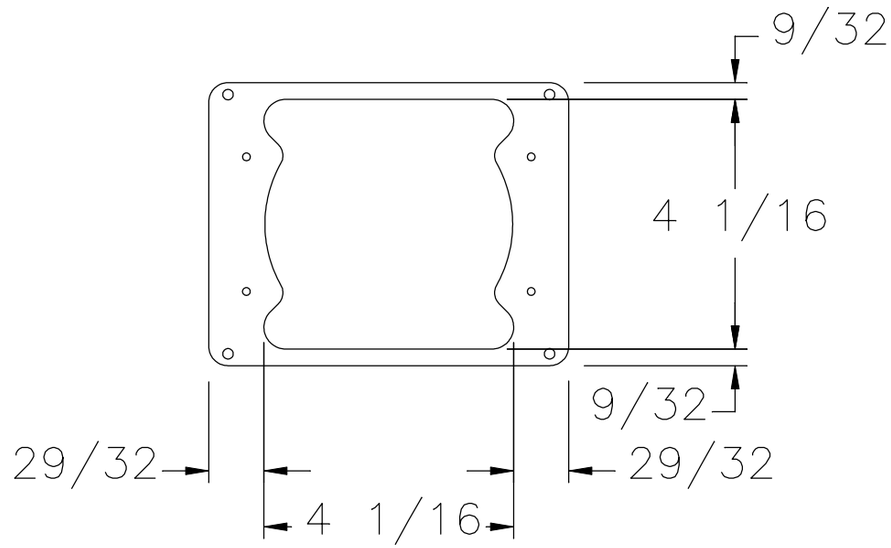

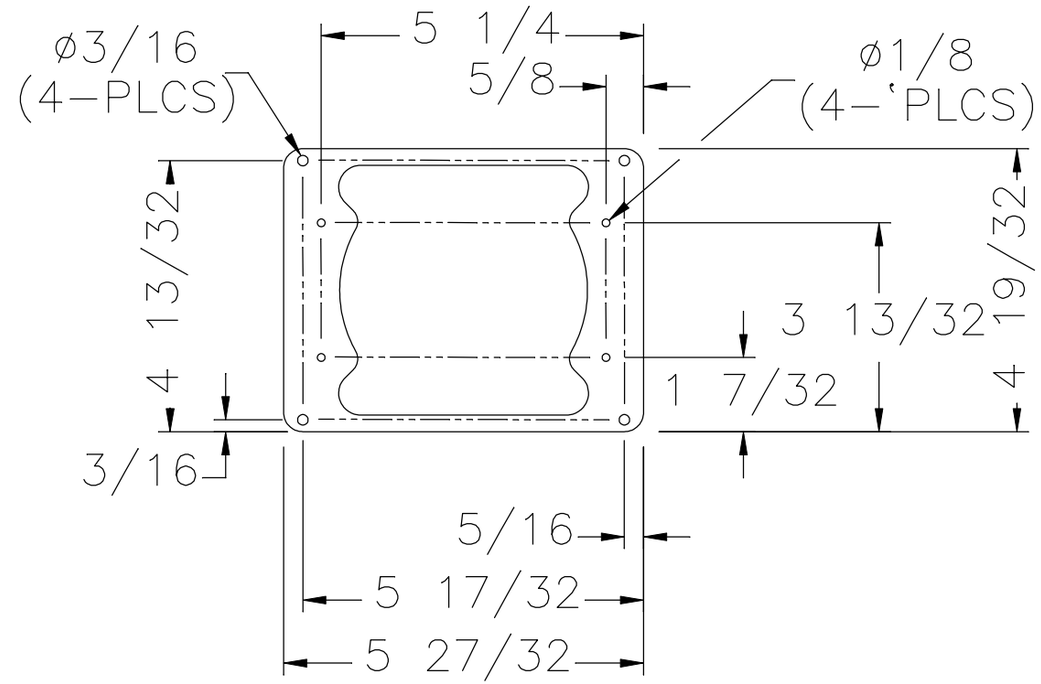

LOWER BRACKET

NEWMAR CORP P.O. Box 30, Nappanee, IN. 46550	Model: KG DB	Sheet 2 OF 3	Drawn by: B. G.	Checked by: D. K.	Revision:	By:
						Date:
UNITS: INCHES	Title: HEADLIGHT BRACKETS	I.D. # 2017\HE\PROFILE\KG\HDLT_SUPT_BRKT	Date: 10/12/15	Date: 11/17/15	Revision:	By:
TITLE BLOCK: 1–5TB						Date: