| ITEM # | QTY | NEWMAR # | DESCRIPTION |
|---|---|---|---|
| 1 | 1 | 133105 | TRAY ASSY, STEEL, BLACK PC, GAUGE VARIES |

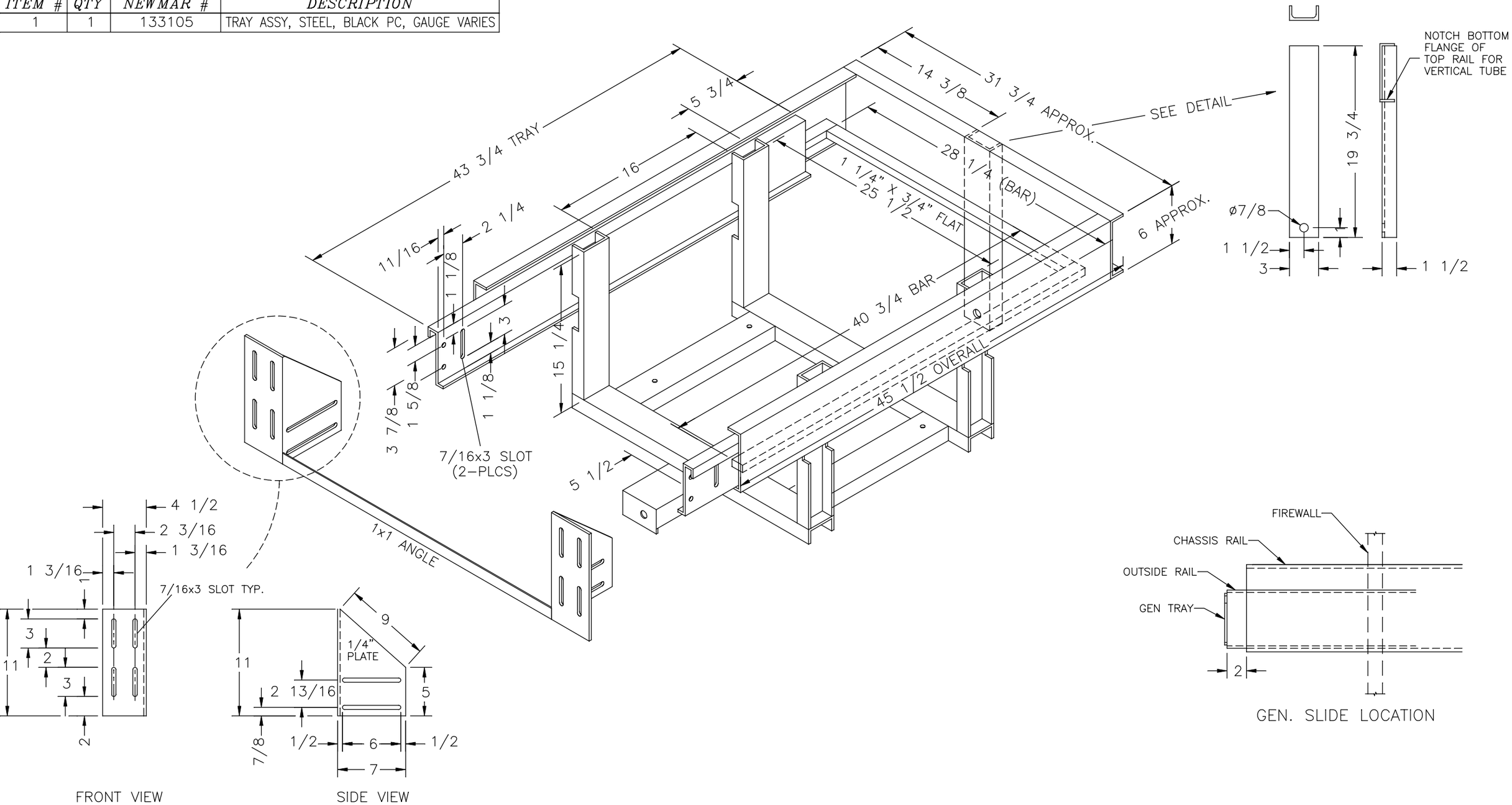


| | | | | | | |
|---|---|---|---|---|---|---|
| NEWMAR CORP<br>P.O. Box 30,<br>Nappanee, IN. 46550 | Model:<br>(SEE INDEX) | Sheet<br>1 OF 2 | Drawn by:<br>B. G. | Checked by:<br>M. W. | Revision: STRETCHED PARTS tUPPER RIGHT CORNER DOWN 1 1/4 | By: B. G.<br>Date: 12/16/15 |
| Title block--1-5TB | Title: ONAN 12.5K<br>GENERATOR SLIDE ASSEMBLY | I.D. # 2017\HE\FRAME\PARTS\KG_GEN_SLIDE | Date:<br>10/8/15 | Date:<br>11/3/15 | Revision: AJDUSTED SLIDE-TO-RAIL HEIGHT ORIGINATING FROM LA/EX ILO KG | By: B. G.<br>Date: 11/25/15 |