ITEM #	QTY	NEWMAR #	DESCRIPTION
1	1	133340	SOFA-84EXTDLLHJKNNONEVL17360
2	1	133341	SOFA-84EXTDLLHJKNNONEVL17370

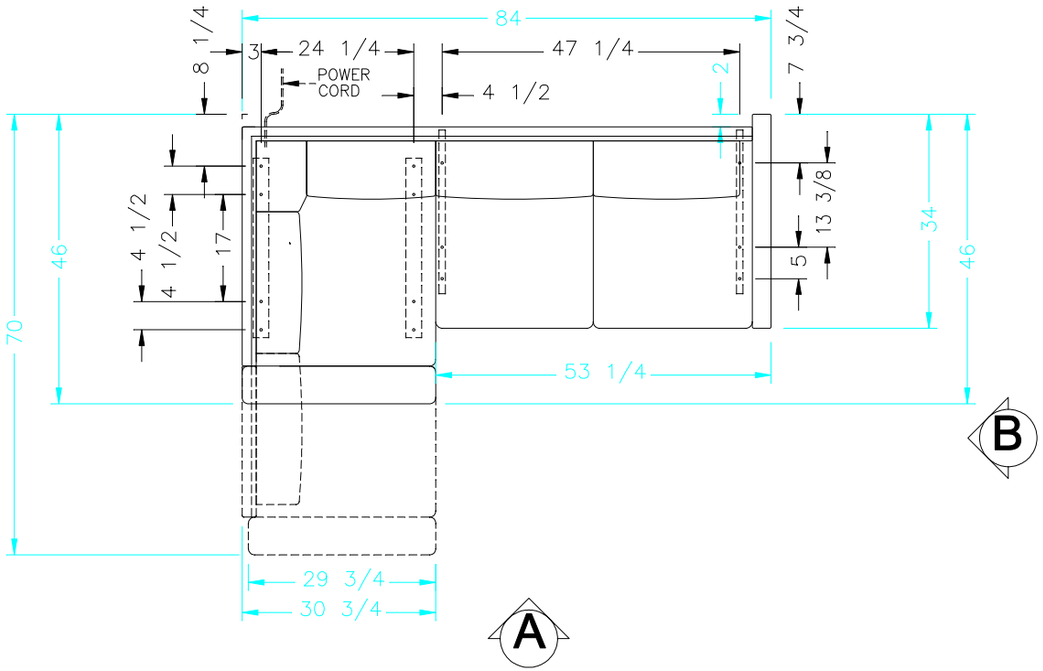

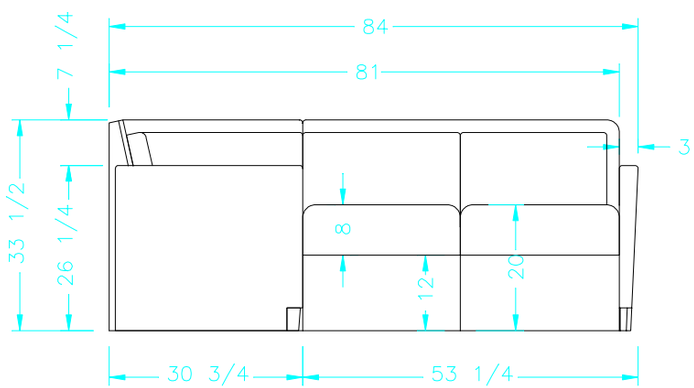

VIEW A

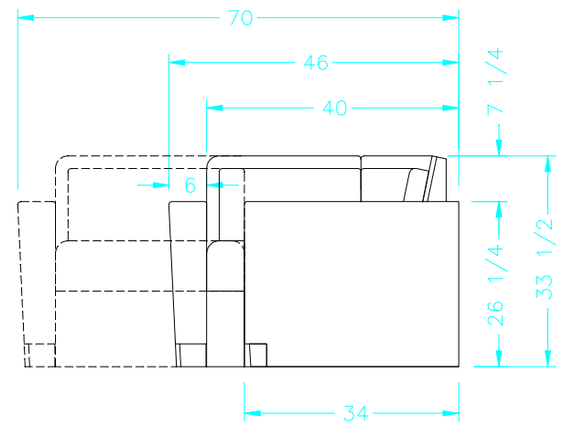

VIEW B

NEWMAR CORP P.O. Box 30, Nappanee, IN. 46550	Model: VL DP, (SEE SOFA CHART)	Sheet 1 OF 1	Drawn by: D. E.	Checked by: R. R.	Revision:	By:
UNITS: INCHES						Date:
TITLE BLOCK: 1TB	Title: FLEX 84" JACK KNIFE L-SOFA, FLAT FLOOR	I.D. # 2017\FURN\FLEX\VL\84L_JK_FF	Date: 9/12/16	Date: 9/12/16	Revision:	By:
						Date: