ITEM #	QTY	NEWMAR #	DESCRIPTION
1	1	133273	SOFA–84STRAT–JKNNONEBT17440
2	1	133671	SOFA–84STRAT–JKNNONEBT17450

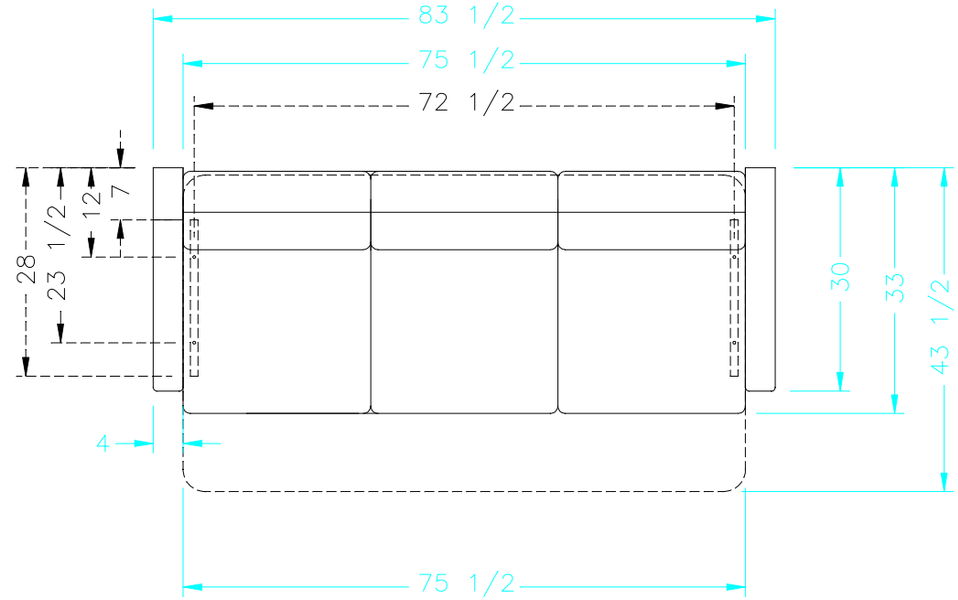

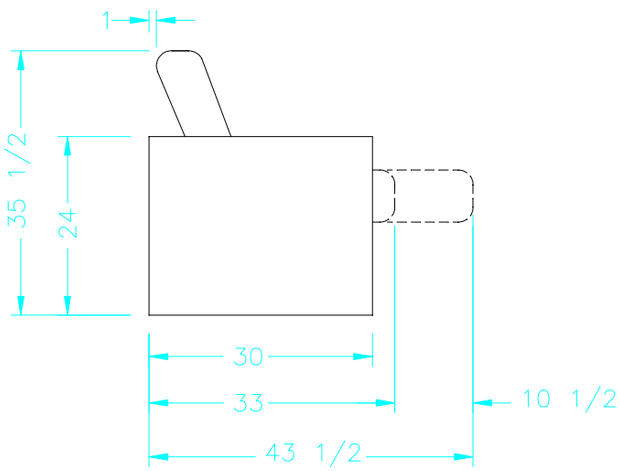

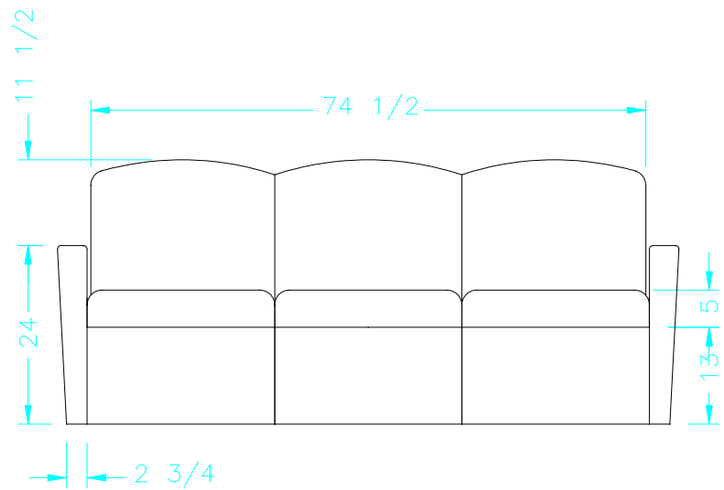

NEWMAR CORP P.O. Box 30, Nappanee, IN. 46550	Model: BT CA (SEE SOFA CHART)	Sheet 1 OF 1	Drawn by: R. M.	Checked by: J. S.	Revision:	By:
						Date:
UNITS: INCHES	Title: FLEX 84"JACK KNIFE SOFA FLAT FLOOR	I.D. # 2017\FURN\FLEX\BTCA\84_JK_FF	Date: 6/22/16	Date: 9/21/16	Revision:	By:
TITLE BLOCK: 1TB						Date: