ITEM #	QTY	NEWMAR #	DESCRIPTION
1	1	135877	SONY TV BRACKET PAINTED BLACK

NOTE:
ADD 1 3/8 x 1 3/8 x 13 ALUMINUM TUBE SPACER – ATTACH TO TV W/ DOUBLE FACE TAPE

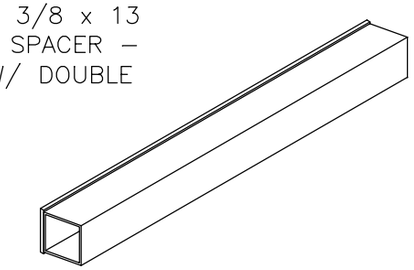

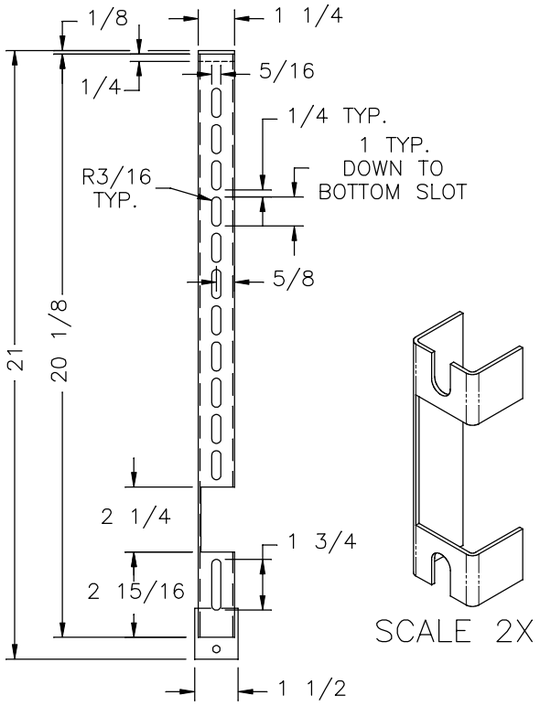

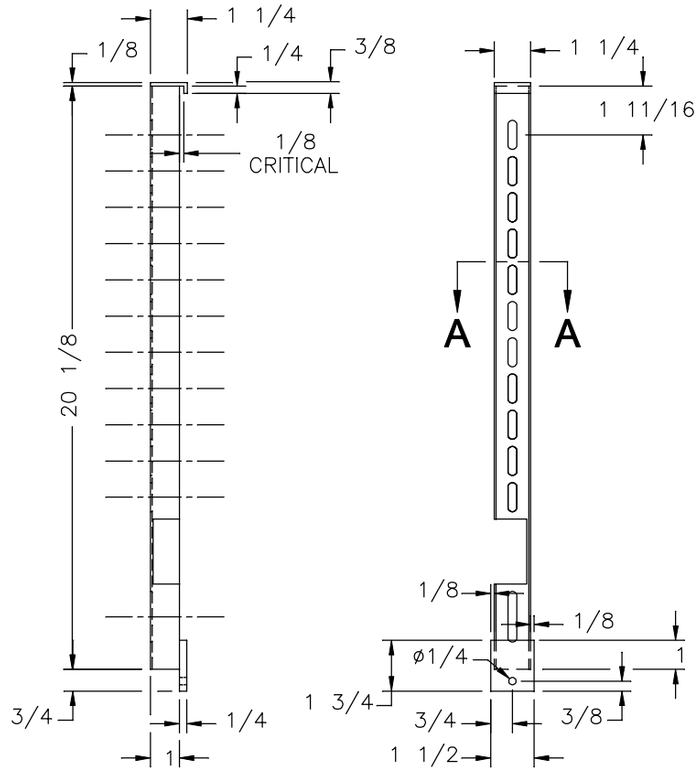

TV BRACKET
(2–REQ'D)

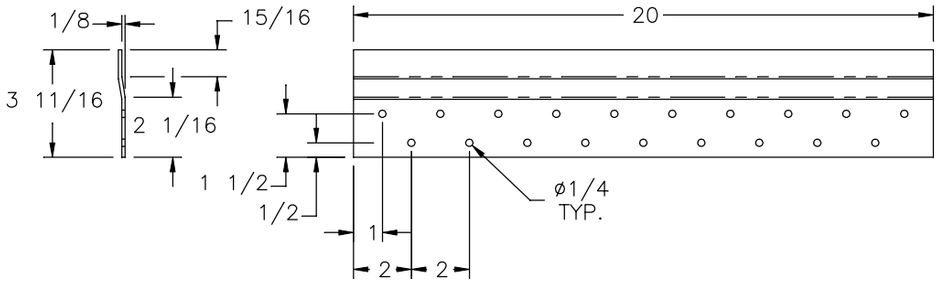

WALL MOUNT BRACKET

FOR TV'S:
CURRENT
40" SONY LED (KDL–40W650D) #135799
48" SONY LED (KDL–48W650D) #135800
49" SONY ULTRA HD (XBR–49X850B) #130301

NEWMAR CORP P.O. Box 30, Nappanee, IN. 46550	Model: (SEE INDEX)	Sheet 1 OF 1	Drawn by: B. G.	Checked by: D. K.	Revision: CREATED NEW PRINT FOR NEW SONY TV'S (ECO 305/306)	By: B. G. Date: 7/27/16
UNITS: INCHES TITLE BLOCK: 1–4FULTB	Title: TV BRACKET FOR 40"/48"/49" SONY TV	I.D. # 2017\COMPONENTS\TV_BRACKETS\STATIONARY	Date: 7/27/16	Date: 7/28/16	Revision:	By: Date: