ITEM #	QTY	NEWMAR #	DESCRIPTION
1	1	136460	MOTOR MOUNT, 1/4". 1020 HRPD CQ NO FIN.

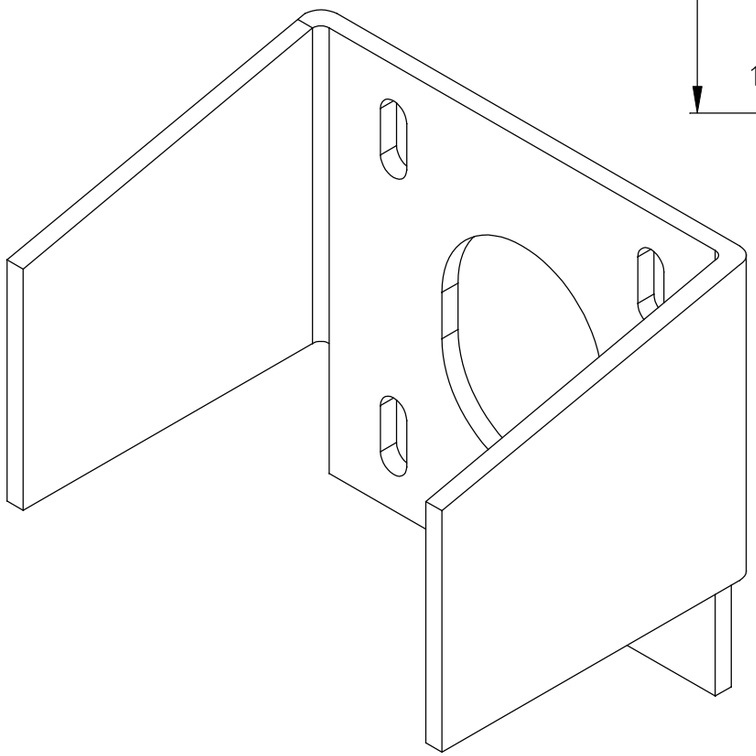

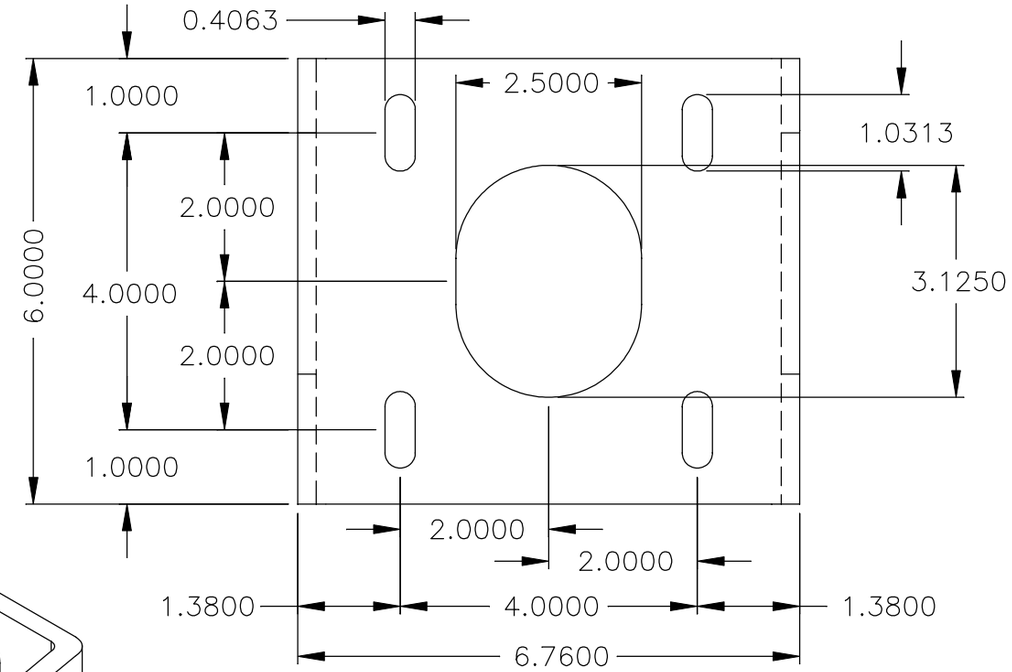

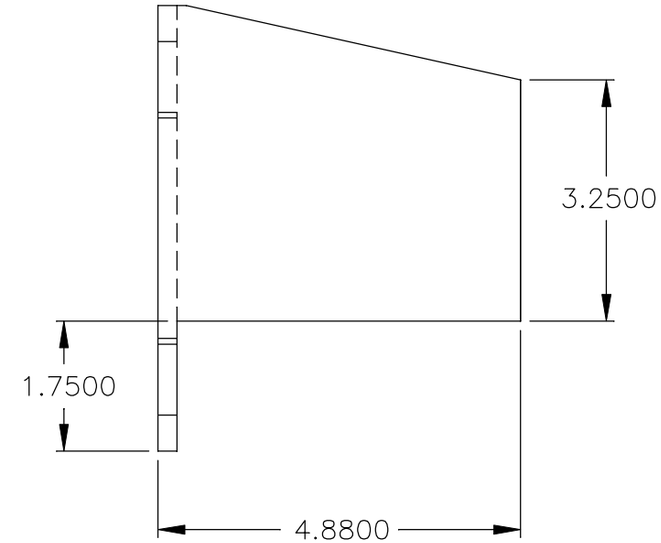

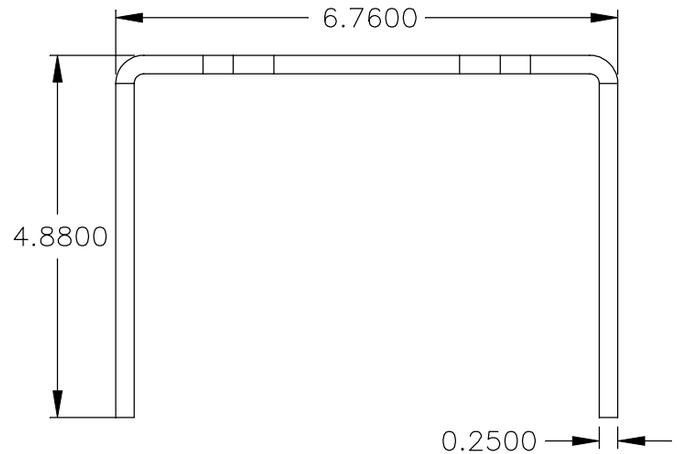

NEWMAR CORP P.O. Box 30, Nappanee, IN. 46550	Model: (SEE INDEX)	Sheet 1 OF 1	Drawn by: B. S.	Checked by: J. S.	Revision: BEGIN USING 1/4" THICK MOTOR MOUNT BRACKET #136460 ILO #74255	By: R. M.
					TO KEEP FROM TWISTING WHEN CYCLING (ECO #374)	Date: 9/7/16
UNITS: INCHES	Title: MOTOR MOUNTING BRACKET	I.D. # SLIDE OUT\PARTS\ BRKT_136460	Date: 8/29/16	Date: 9/14/16	Revision:	By:
TITLE BLOCK: 1-2FULTB						Date: