ITEM #	QTY	NEWMAR #	DESCRIPTION
1	1	136612	12 GA STEEL POWDER COATED BLK

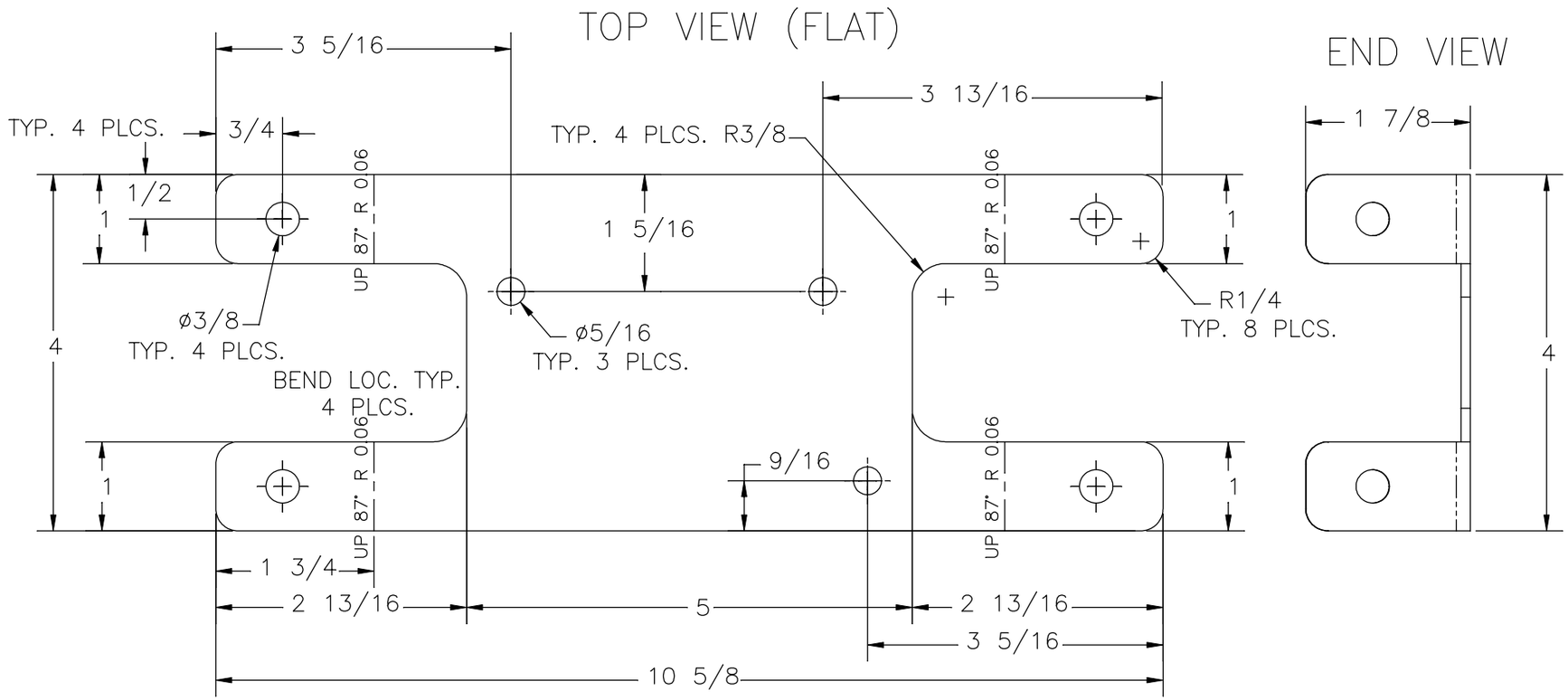

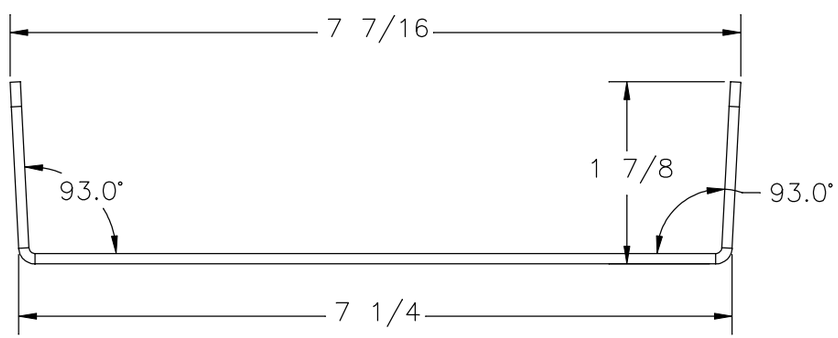

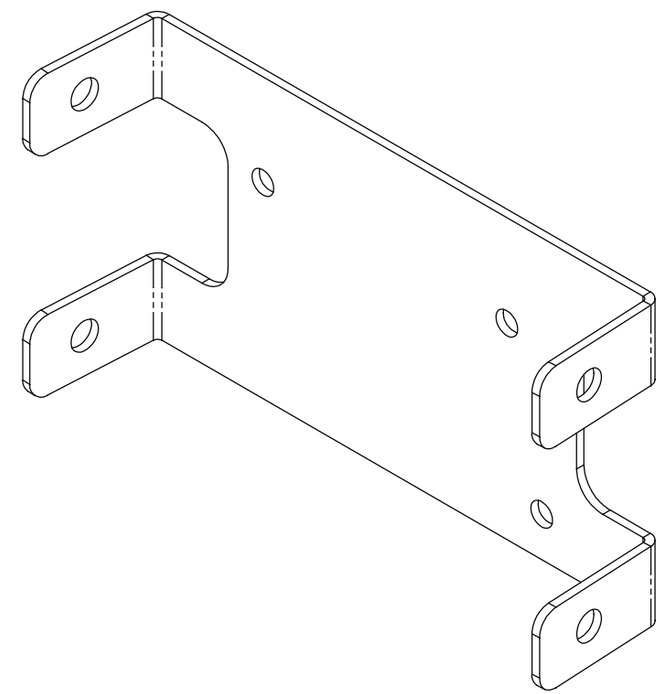

NEWMAR CORP P.O. Box 30, Nappanee, IN. 46550	Model: NADP 3341, 3343	Sheet 1 OF 1	Drawn by: B. B.	Checked by: J. S.	Revision:	By:
						Date:
UNITS: INCHES	Title: BRACKET MOUNT ONGUARD RADAR MODULE	I.D. # 2018\DP\FRAME\PARTS\BRACKET_MOUNT_ON_GUARD_136612	Date: 11/30/16	Date: 12/29/16	Revision:	By:
TITLE BLOCK: 1-2FULTB						Date: