ITEM #	QTY	SHEET #	NEWMAR #	DESCRIPTION
1	1	1	136616	.0747 (14GA.) x 2.625 x 9.25 x 10 CONDUIT BOX-PAINTED BLACK

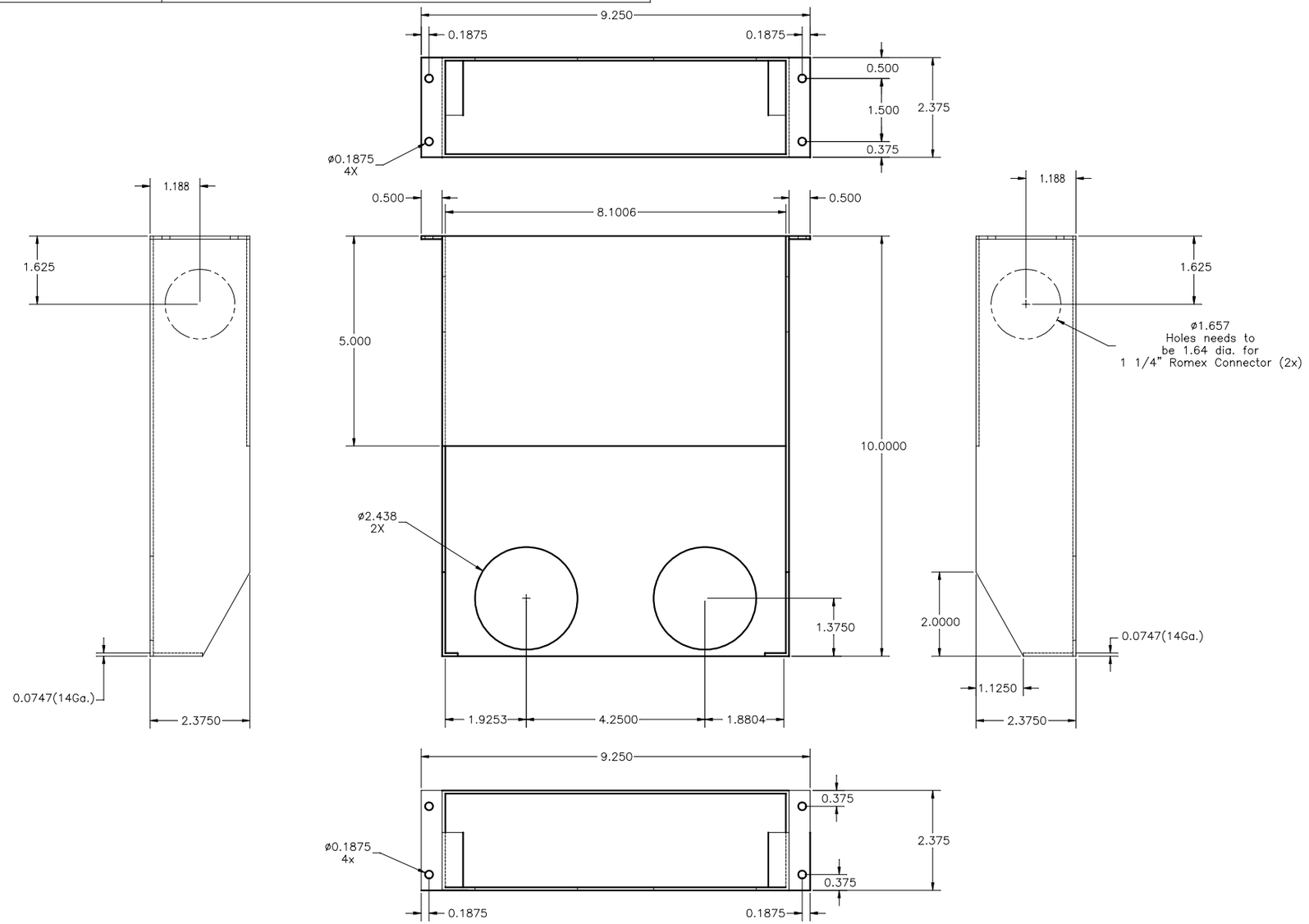

NEWMAR CORP P.O. Box 30, Nappanee, IN. 46550	Model: (SEE INDEX)	Sheet 1 of 1	Drawn by: B. S.	Checked by: D. K.	Revision: PRINT CREATED (ECO #395) By: D. K. Date: 9/16/16
UNITS: INCHES	Title: HWH FLAT FLOORS SLIDE OUT CONDUIT BOX-2 UP	I.D. # SLIDE OUT\PARTS\ MISC1114	Date: 9/8/16	Date: 9/16/16	Revision: By: Date:
TITLE BLOCK: 1-2FULTB					