ITEM #	QTY	NEWMAR #	DESCRIPTION	
1	1	137159	22ga(.034) GALV. BATTERY BOX	– SEE SHEET 1 (LH)
1	1	137165	22ga(.034) GALV. COMPONENT BOX	– SEE SHEET 2 (RH)

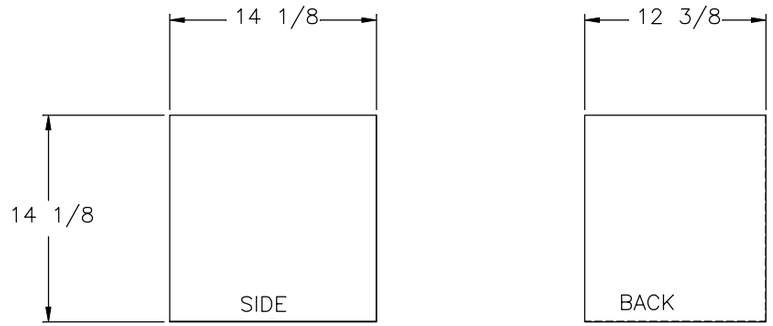

REAR PIECE

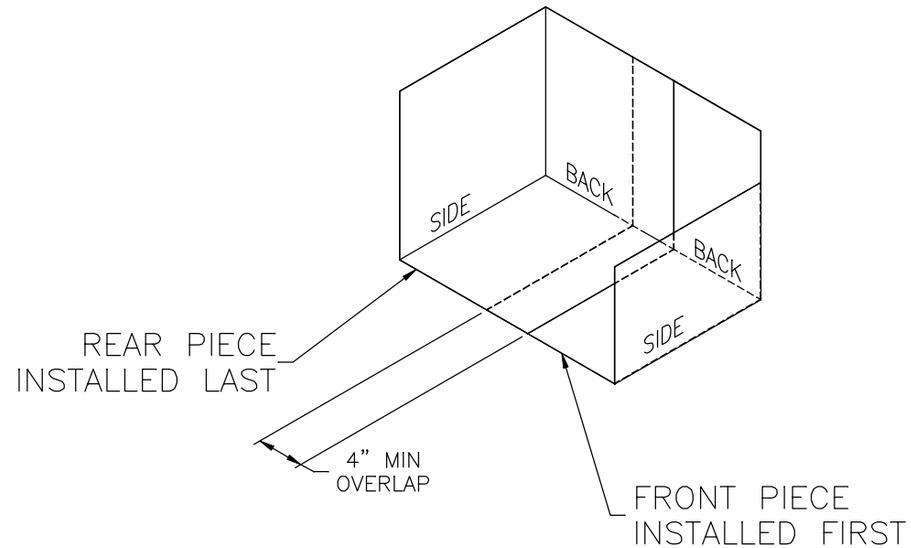

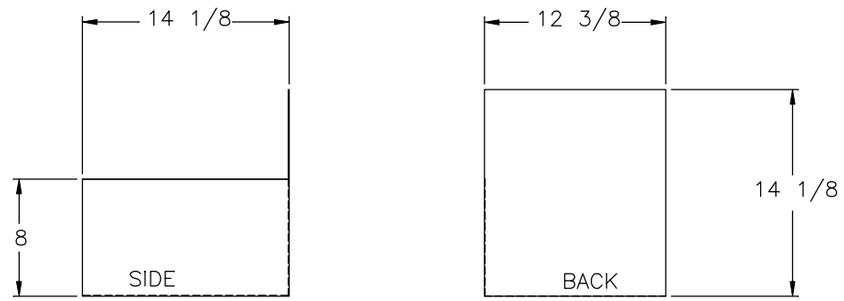

FRONT PIECE

MIN. RADIUS PERMITTED

NEWMAR CORP P.O. Box 30, Nappanee, IN. 46550	Model: NAPD	Sheet 1 OF 2	Drawn by: B. B.	Checked by: J. S.	Revision: REMOVED SLOT ADDED 8" SIDE WALL	By: B. B. Date: 4/12/17
UNITS: INCHES TITLE BLOCK: 1TB	Title: 2 PIECE GALV. BATTERY BOX	I.D. # 2018\DP\FRAME\PARTS\MISC2007	Date: 11/22/16	Date: 12/20/16	Revision: REVISED SLOT IN SIDE	By: B. B. Date: 2/17/17