ITEM #	QTY	NEWMAR #	DESCRIPTION	
1	1	137159	22ga(.034) GALV. BATTERY BOX	– SEE SHEET 1 (LH)
1	1	137165	22ga(.034) GALV. COMPONENT BOX	– SEE SHEET 2 (RH)

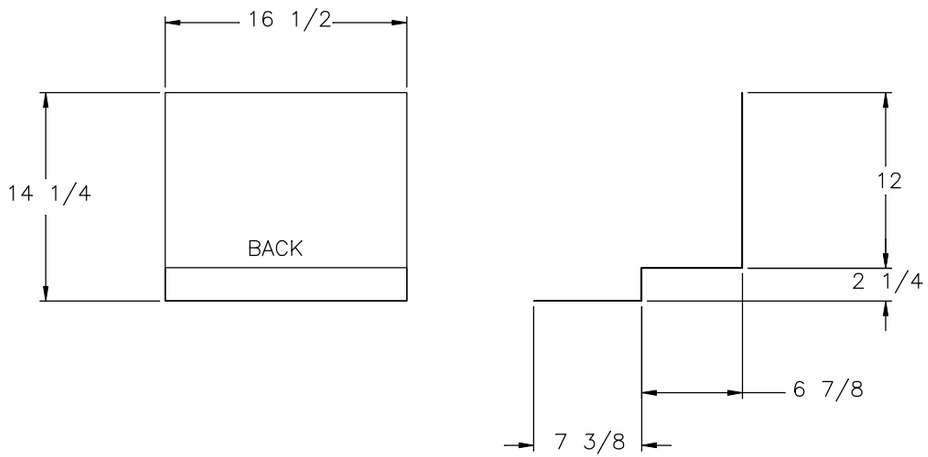

REAR PIECE

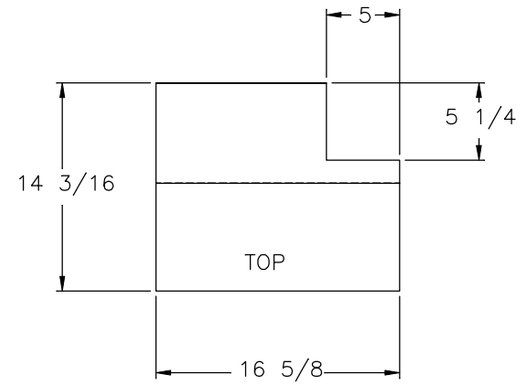

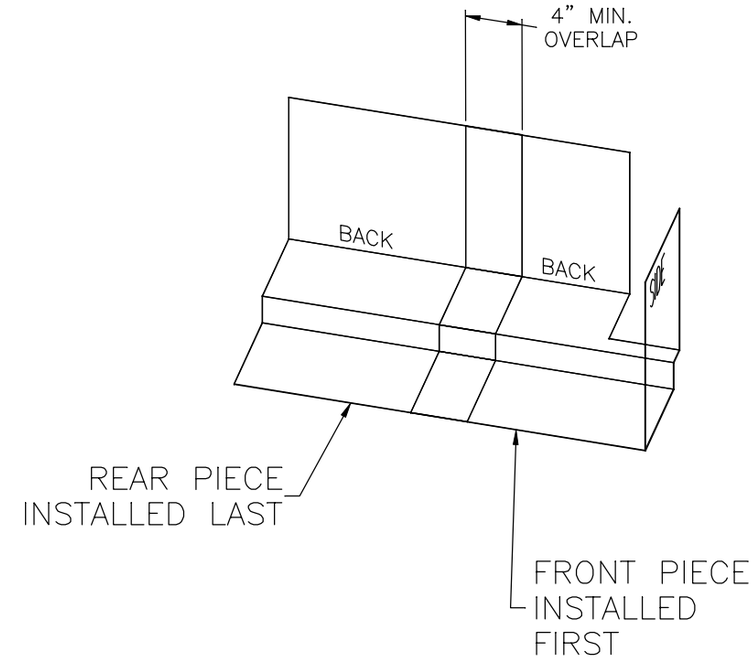

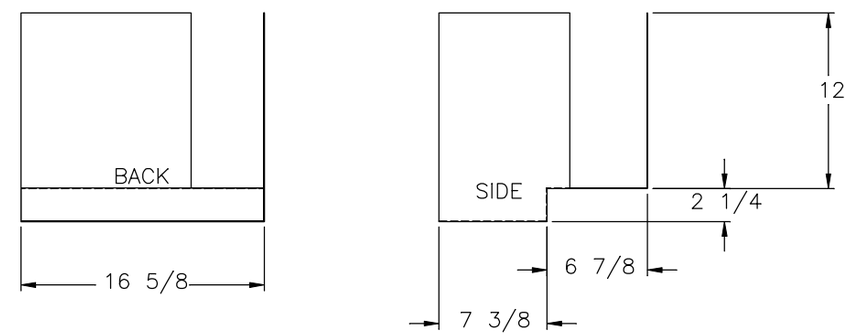

FRONT PIECE

MIN. RADIUS PERMITTED

NEWMAR CORP P.O. Box 30, Nappanee, IN. 46550	Model: NAPD	Sheet 2 OF 2	Drawn by: B. B.	Checked by: J. S.	Revision: REMOVED SLOT ADDED 5 x 5 1/4 OPENING — By: B. B. — Date: 4/12/17
UNITS: INCHES	Title: 2 PIECE GALV. COMPONENT BOX	I.D. # 2018\DP\FRAME\PARTS\MISC2007	Date: 11/22/16	Date: 12/20/16	Revision: CHANGED DIM'S TO 8 ILO 6 AND 6 1/2 ILO 5 1/2 — By: B. B. — Date: 2/6/17
TITLE BLOCK: 1TB					