ITEM #	QTY	NEWMAR #	DESCRIPTION
1	1	137252	3/4" MOLDED FIBERGLASS COVER

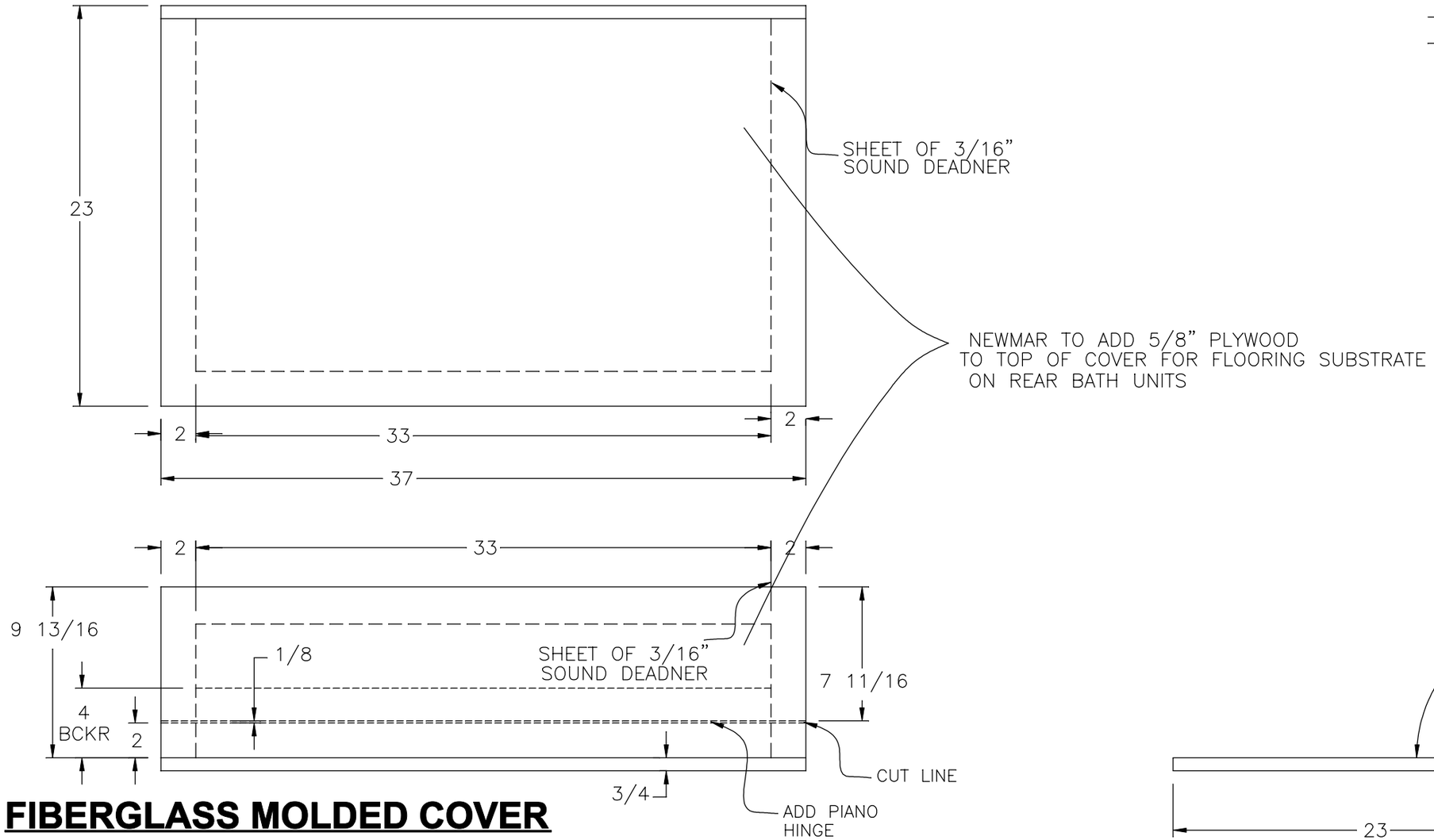

FIBERGLASS MOLDED COVER

FILLED WITH HONEY-COMB

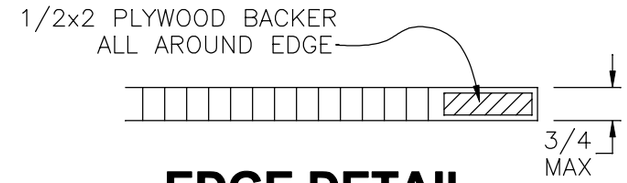

EDGE DETAIL

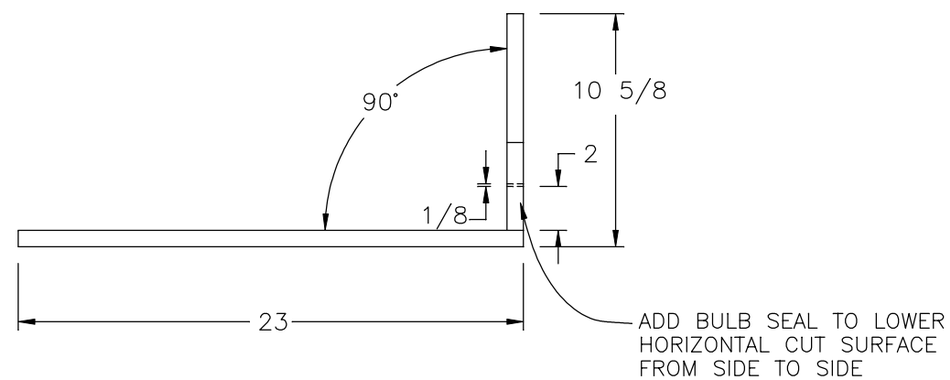

NEWMAR CORP P.O. Box 30, Nappanee, IN. 46550	Model: NADP	Sheet 1 OF 1	Drawn by: B. B.	Checked by: J. S.	Revision: UPDATED PER PRODUCTION	By: B. B.
UNITS: INCHES						Date: 1/13/17
TITLE BLOCK: 1-5TB	Title: ENGINE COVER	I.D. # 2018\DP\FRAME\PARTS\NADP_EC	Date: 11/30/16	Date: 12/29/16	Revision:	By:
						Date: