PART NUMBER	DESCRIPTION	POWER WIRE CONNECTORS	POWER WIRE TERMINALS	MOTOR WIRE CONNECTORS	MOTOR WIRE TERMINALS
34000488NB	PLAIN FINISH, RH	DELPHI 8917548	DELPHI 12020338	SEBRO PLASTICS 1529 RED, 1531 BLACK	AMP 1438231-5
34000488NBB	BLACK E-COAT, RH	DELPHI 8917548	DELPHI 12020338	SEBRO PLASTICS 1529 RED, 1531 BLACK	AMP 1438231-5
34000489NB	PLAIN FINISH, LH	DELPHI 8917548	DELPHI 12020338	SEBRO PLASTICS 1529 RED, 1531 BLACK	AMP 1438231-5
34000489NBB	BLACK E-COAT, LH	DELPHI 8917548	DELPHI 12020338	SEBRO PLASTICS 1529 RED, 1531 BLACK	AMP 1438231-5

PART NUMBER
3400048XN SERIES

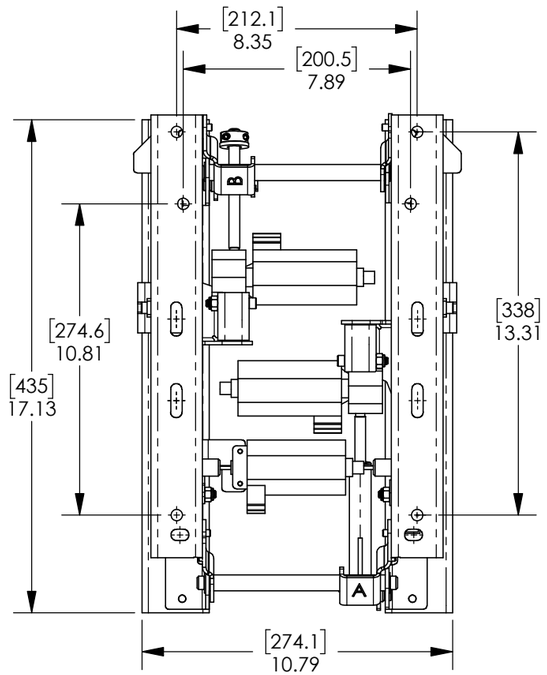

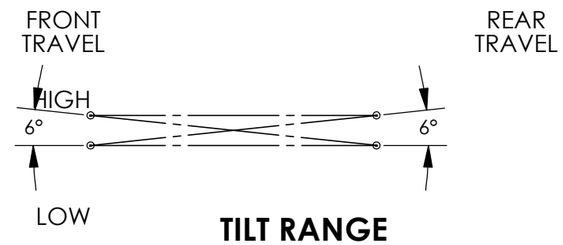

TILT RANGE

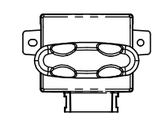

INCLUDES SWITCH AND WIRE HARNESS ASSY

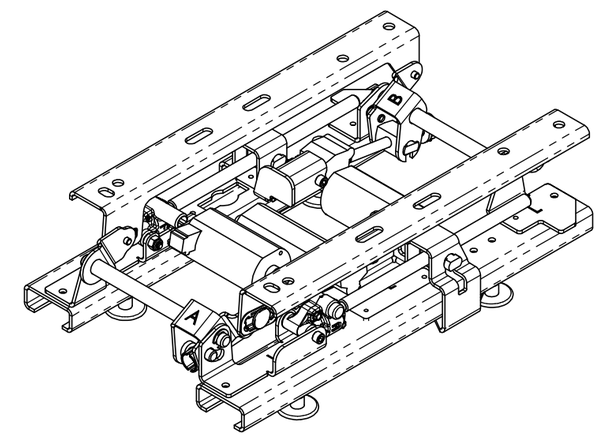

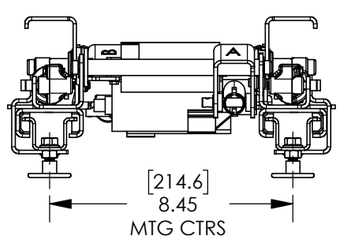

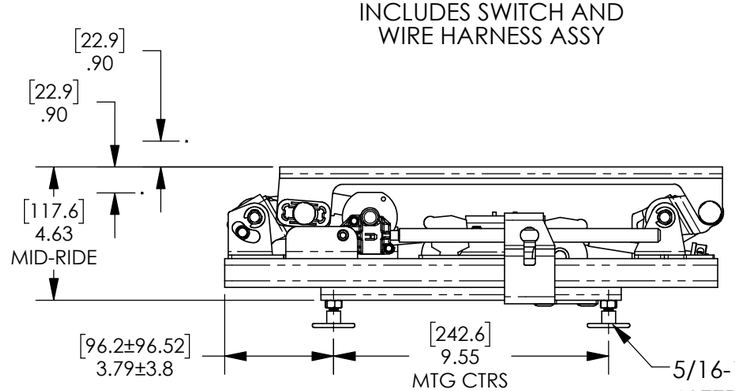

WEIGHT:
22.0 LBS
10.0 KGS

NOTES:
1. ALL DIMENSIONS HAVE AN IMPLIED TOLERANCE OF ±.25" [6.4MM] EXCEPT THE MOUNTING DIMENSIONS.
2. DIMENSIONS IN [ ] ARE IN MILLIMETERS.
3. THE 6-WAY POWER SEAT ADJUSTER CONFORMS TO FMVSS 207 IN AFFECT AT TIME OF MANUFACTURE.
4. ALL COMPONENTS WITH E-COAT OR ZINC NICKEL DICHROMATE FINISH CONFORM TO ASTM B-117, 250 HOURS OF SALT SPRAY.
5. STALL CURRENT AT 12 VDC IS 22 A PER MOTOR.
6. THE RECOMMENDED MAXIMUM WEIGHT IS 400 LBS.
7. THE TRAVEL RATE IN THE VERTICAL MOTION IS 64 MM/SEC OR 2.5 INCH/SEC.
8. THE TRAVEL RATE IN THE HORIZONTAL MOTION IS 25 MM/SEC OR 1.0 INCH/SEC.
9. THE RECOMMENDED TEMPERATURE RANGE IS -29 °C TO +71 °C OR -20 °F TO +160F.
10. THE WIRE HARNESS LENGTH FROM THE REAR VERTICAL MOTOR TO SWITCH IS 31.5 INCH (800MM).

H.O. BOSTROM
H.O. BOSTROM CO., INC.
818 PROGRESS AVENUE
WAUKESHA, WI 53186
www.hobostrom.com

NOTICE:
THIS DRAWING CONTAINS CONFIDENTIAL PROPRIETARY INFORMATION OWNED BY H.O. BOSTROM., INC. BY ACCEPTING THIS DRAWING, THE BORROWER AGREES NOT TO DISCLOSE, USE OR DUPLICATE IT TO OTHERS, EXCEPT AS AUTHORIZED IN WRITING BY H.O. BOSTROM CO., INC.

DESCRIPTION: ADJUSTER, 6-WAY, NARROW

CHECKED BY:	DRAWN BY:	FINISH:	
DFB	KAR		
DATE: 4/30/2018	DATE: 4/27/2018	PART NUMBER: 3400048XN SERIES	REV LVL A
SIMILAR TO:	SCALE: 1:5		