ITEM #	QTY	NEWMAR #	DESCRIPTION
1	1	137525	HANDLE 2 PT PIVOT PLATE 14ga POWDER COATED BLACK

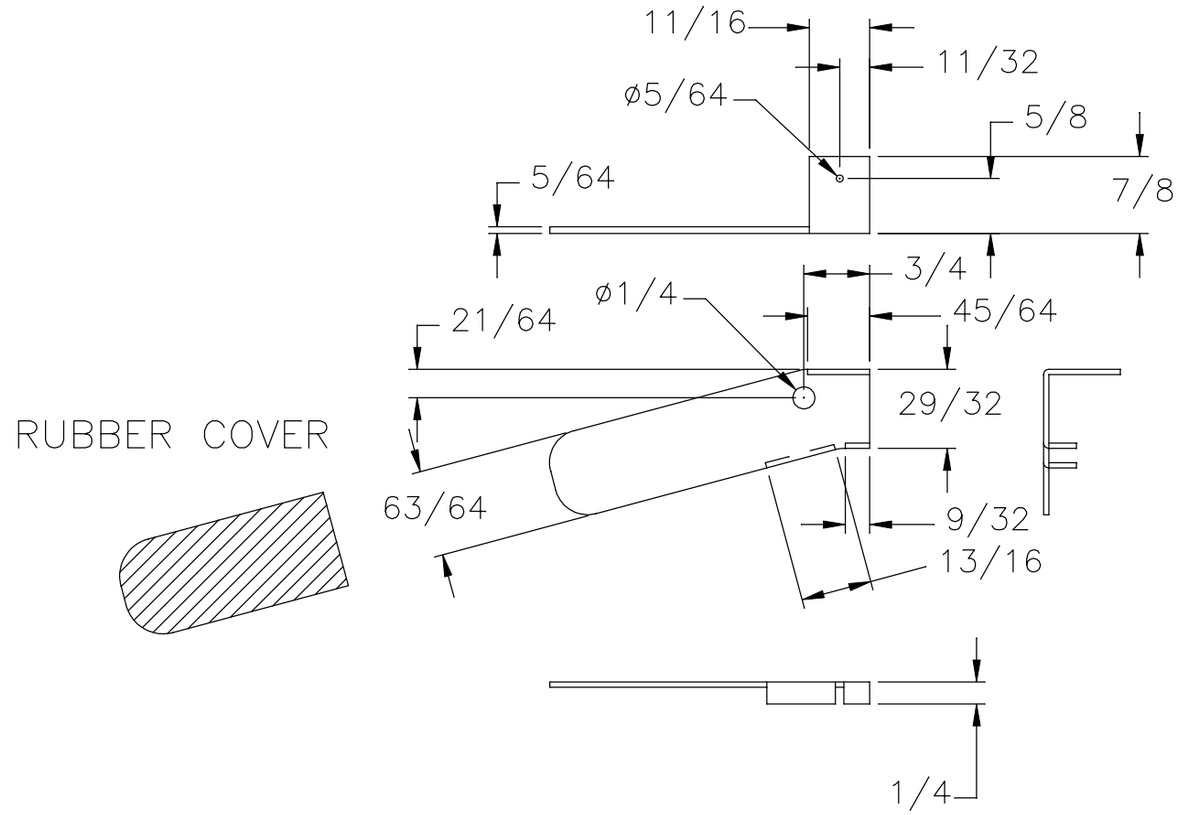

NEWMAR CORP P.O. Box 30, Nappanee, IN. 46550	Model: NADP	Sheet 1 OF 1	Drawn by: B. B.	Checked by: J. S.	Revision:	By:
						Date:
UNITS: INCHES	Title: SH DBL BAGGAGE DOOR 2 PT PIVOT LATCH HANDLE	I.D. # 2018\DP\PROFILE\NA\DBL_BAGGAGE_DOOR_INSIDE_HANDLE	Date: 12/28/16	Date: 12/29/16	Revision:	By:
TITLE BLOCK: 1-5TB						Date: