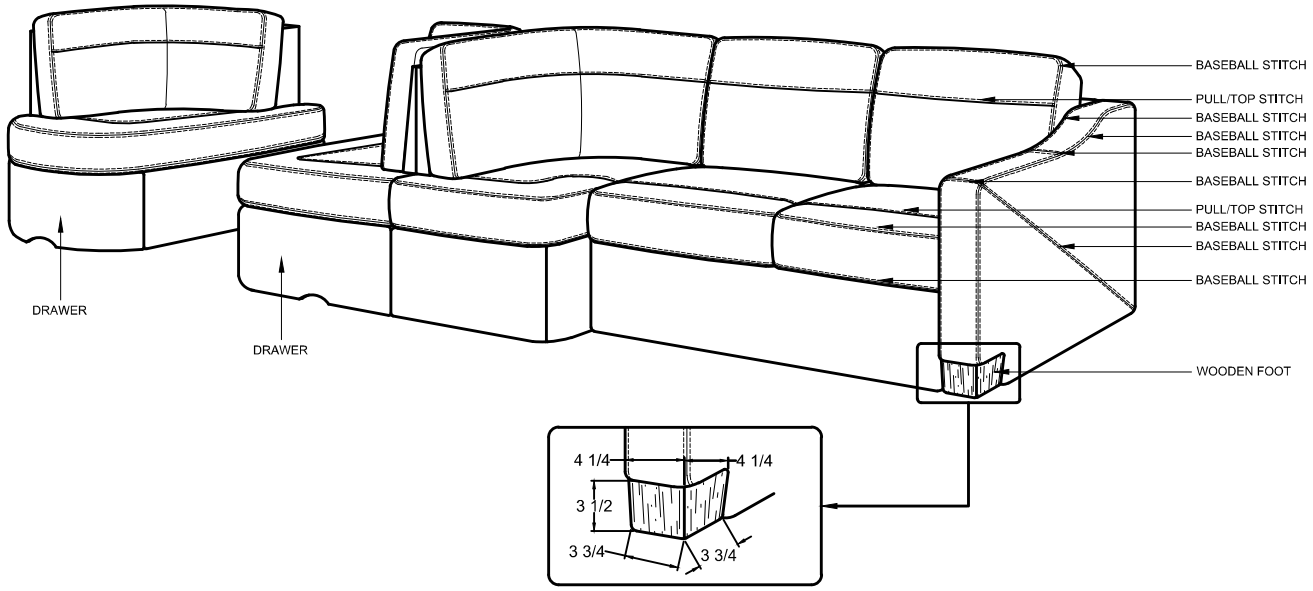

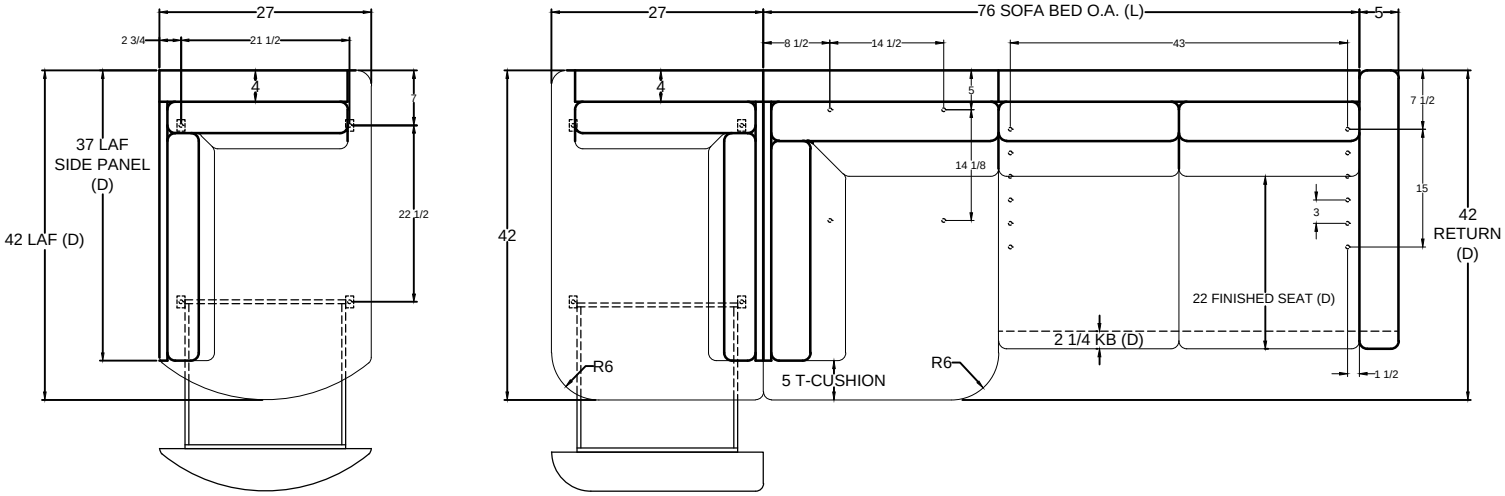

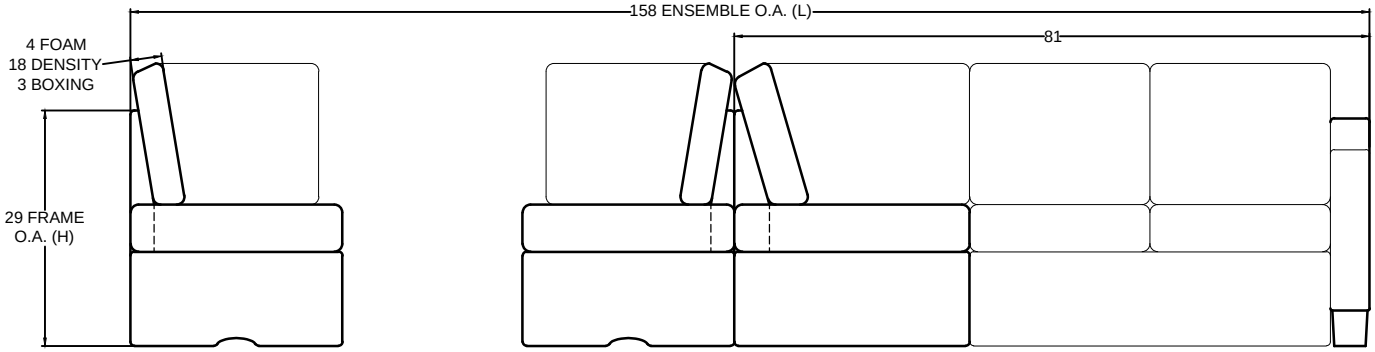

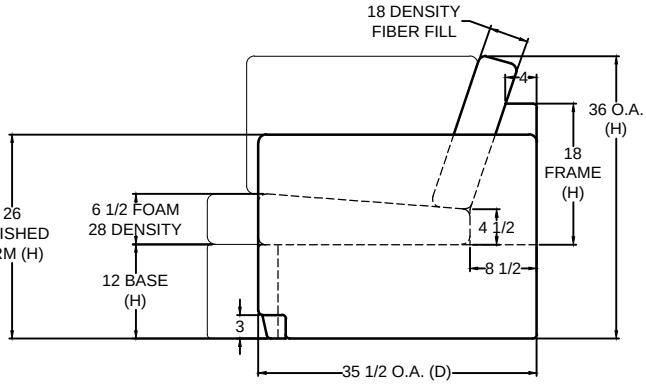

VILLA INTERNATIONAL
13760 Midway St.
Cerritos, CA 90703
Tel 562-404-8111
Fax 562-404-7781

TITLE	DWG. NO.	REV.	APV	SCALE 1:1
2018 MADP 158" J-SOFA BED/F2F DINETTE ENSEMBLE	VI3000299	--	--	DO NOT SCALE DRAWING. UNLESS OTHERWISE SPECIFIED DIMENSIONS ARE IN INCHES.
	DR A.CERVANTES	DATE 01.23.17	--	

THIS DRAWING IS THE PROPERTY OF VILLA INTERNATIONAL MFG. ALL RIGHTS RESERVED.

REVISIONS