ITEM #	QTY	NEWMAR #	DESCRIPTION
1	–	138010	UNI–GRIP SD 1500 SPONGE RUBBER

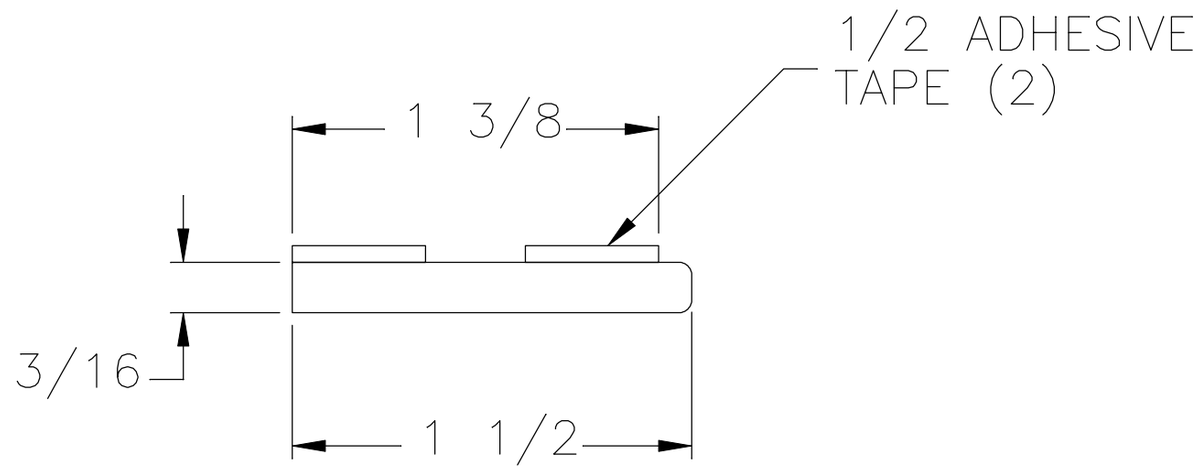

SCALE 1:1

NEWMAR CORP P.O. Box 30, Nappanee, IN. 46550	Model: NA DP	Sheet 1 OF 1	Drawn by: D. F.	Checked by: B. B.	Revision:	By:
						Date:
UNITS: INCHES	Title: DOUBLE BAGGAGE DOOR SEAL	I.D. # 2018\DP\PROFILE\PARTS\SEAL_138010	Date: 8/16/17	Date: 8/16/17	Revision:	By:
TITLE BLOCK: 1–2FULTB						Date: