ITEM #	QTY	NEWMAR #	DESCRIPTION
1	–	138732	BAGGAGE DOOR STUD PLATE

12ga. STEEL (POWDER COAT BLACK)

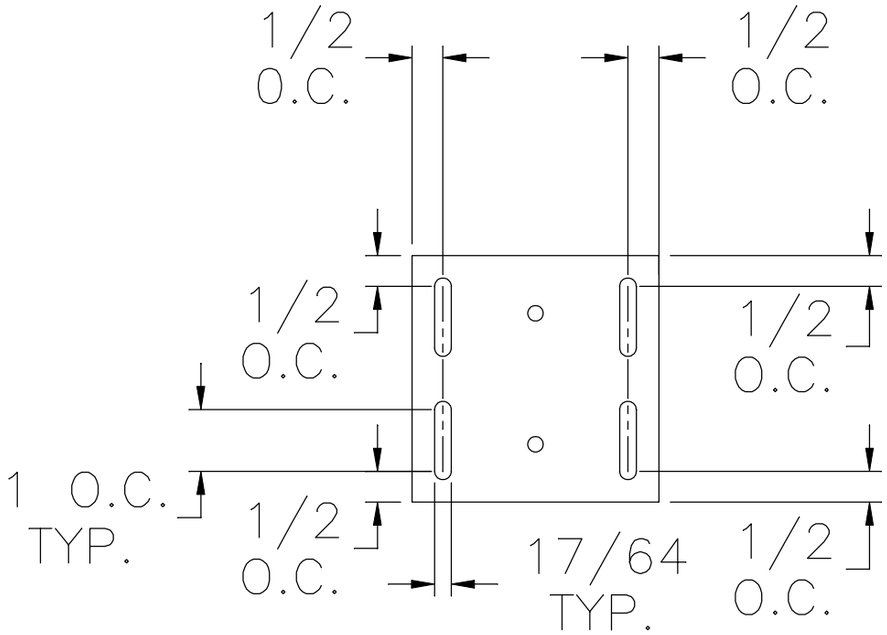

TOP VIEW

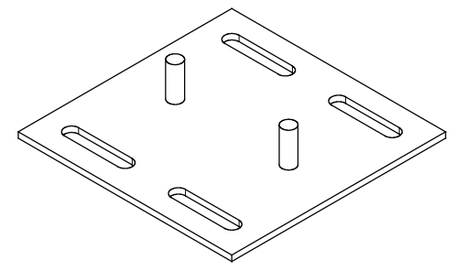

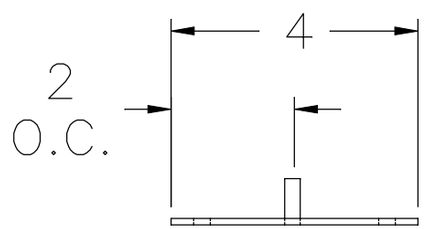

FRONT VIEW

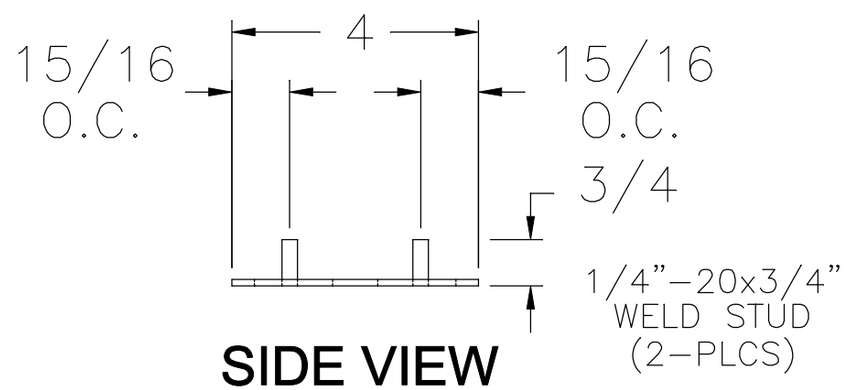

SIDE VIEW

NEWMAR CORP P.O. Box 30, Nappanee, IN. 46550	Model: KG DB	Sheet 1 OF 1	Drawn by: B. G.	Checked by: D. K.	Revision: CREATED NEW PRINT PER ENGINEERING (ECO 7)	By: B. G.
						Date: 2/10/17
UNITS: INCHES	Title: BAGGAGE DOOR STUD PLATE	I.D. # 2018\HE\PROFILE\PARTS\KG_STUD_PLT_138732	Date: 2/10/17	Date: 2/14/17	Revision:	By:
TITLE BLOCK: 1TB						Date: