ITEM #	QTY	NEWMAR #	DESCRIPTION
1	–	139150	BRKT WIPER SUPPORT

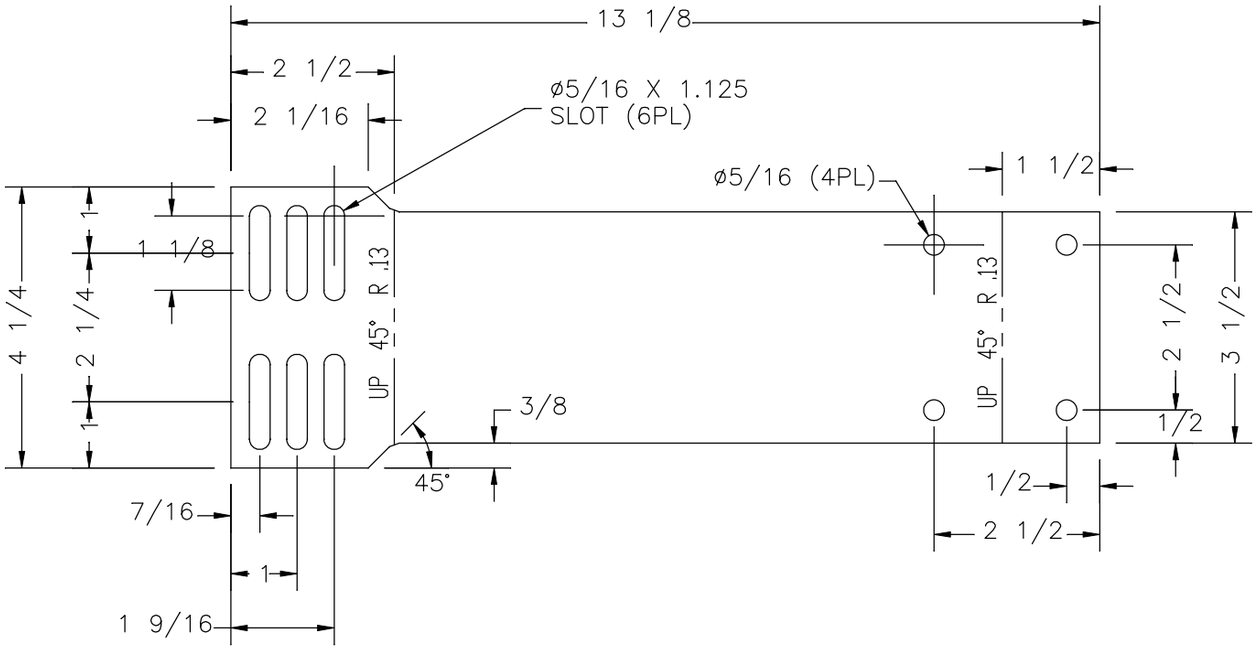

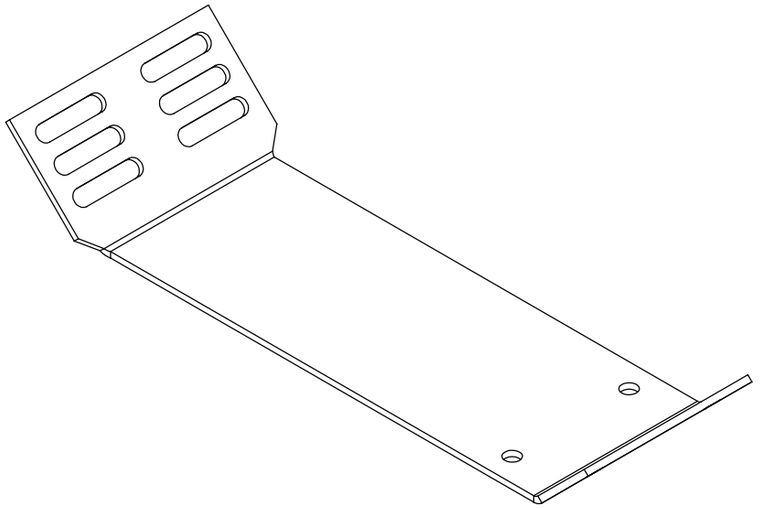

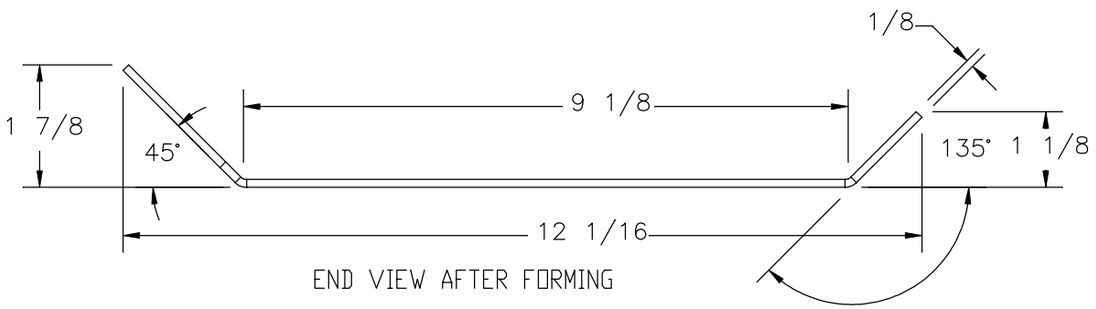

END VIEW AFTER FORMING

NOTES:
1.) MATERIAL TO BE 11 GA STEEL
2.) FINISH TO BE POWDER COAT BLACK

NEWMAR CORP P.O. Box 30, Nappanee, IN. 46550	Model: (SEE INDEX)	Sheet 1 OF 1	Drawn by: B. L. G.	Checked by: R. R.	Revision: Created new print for 2017 due to alignment issues. (ECO #578)	By: B. L. G. Date: 4/17/17
UNITS: INCHES	Title: WINDSHIELD WIPER SUPPORT BRACKET	I.D. # 2017\DP\FRAME\PARTS\WIPER_BRKT	Date: 4/17/17	Date: 4/18/17	Revision:	By: Date:
TITLE BLOCK: 1-2FULTB						