ITEM #	QTY	PART #	DESCRIPTION
1	1	140024-01	BOTTOM BAR WITH CHANNEL
2	1	140024-02	BOTTOM BAR WITH ANGLE
3	1	140024-03	TOP BAR WITH CHANNEL
4	1	140024-04	TOP BAR WITH ANGLE
5	2	FSTNL0157323	RIVET, STEEL 3/8 DIAX1 LONG TRUSS HEAD
6	5	MCM92141A031	WASHER, 3/8 STAINLESS STEEL
7	1	SA_LOCK_ARM_001	BAR, VERTICAL CONNECTING

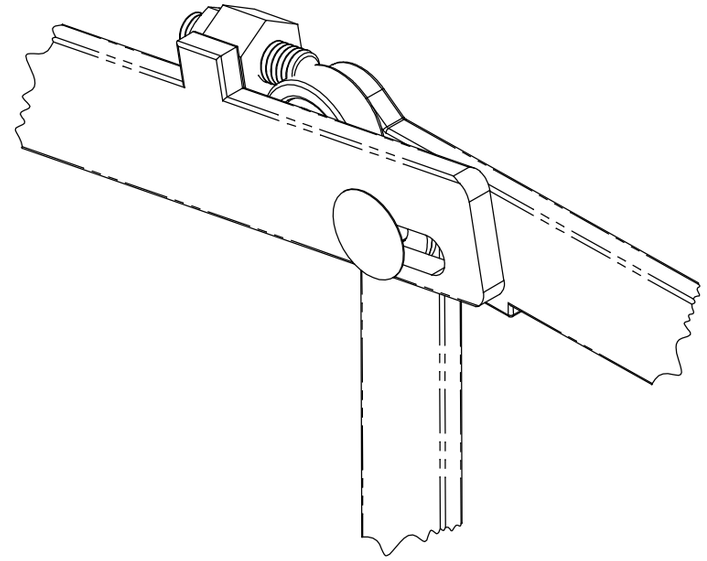

SIDE VIEW

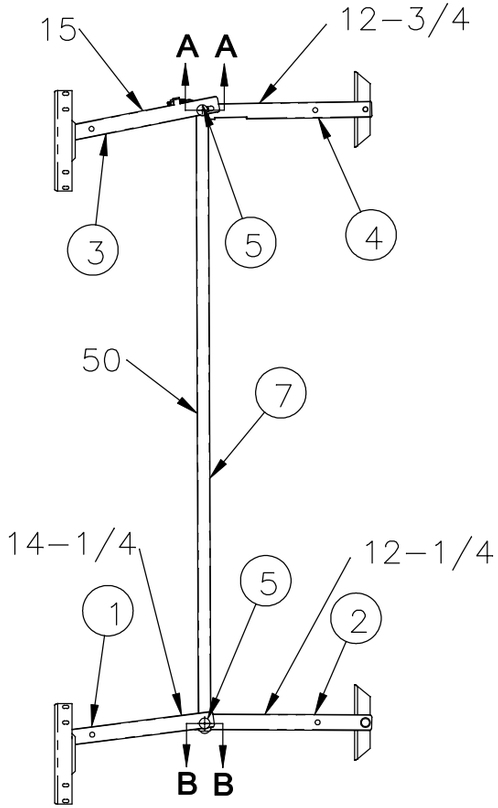

FRONT VIEW

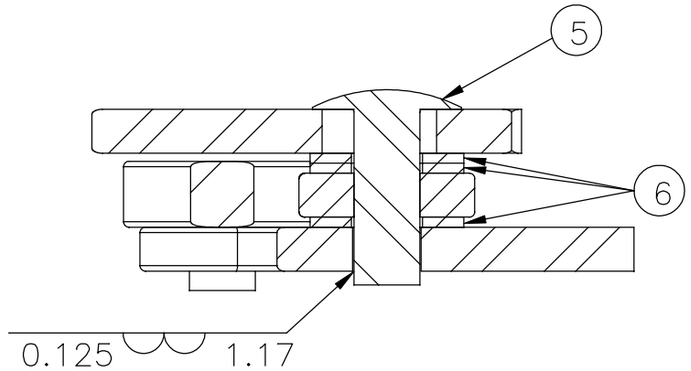

SECTION A-A
SCALE 1:1

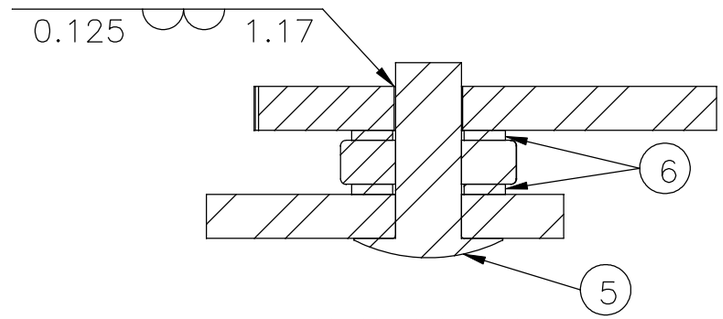

SECTION B-B
SCALE 1:1

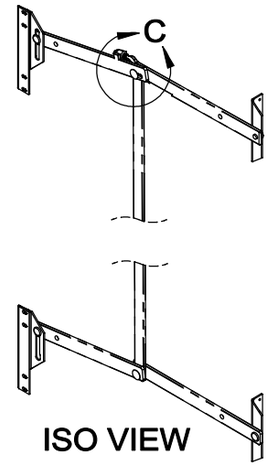

ISO VIEW

NOTES:
1. LENGTHS NOTED IN FRONT VIEW ARE OVERALL DIMENSIONS
2. PART DETAIL DRAWINGS LOCATED AT: P:\SLIDEOUT\SA_LOCK_ARM\DWG's

NEWMAR CORP P.O. Box 30, Nappanee, IN. 46550	Model: S-O TYP PACK	Sheet 1 OF 1	Drawn by: M. W.	Checked by: M. W.	Revision: REMOVED NOTE TO MAINTAIN 0.015" GAP AND UPDATED SECTIONS A-A & B-B TO REMOVE GAP (2022 ECO #516)	By: J. K. Date: 9/29/21
UNITS: INCHES TITLE BLOCK: 1TB	Title: LOCK ARM, 24" LH SELF ACTIVATING	I.D. # SLIDE OUT\SA_LOCK_ARM\ 140024	Date: 11/17/17	Date: 12/14/17	Revision: ADDED OVERALL LENGTH OF BARS TO BETTER IDENTIFY CORRECT PARTS ON BUILT ARMS	By: J. K. Date: 3/16/21