ITEM #	QTY	NEWMAR #	DESCRIPTION
1	2	142222	FOG LIGHT BRACKET

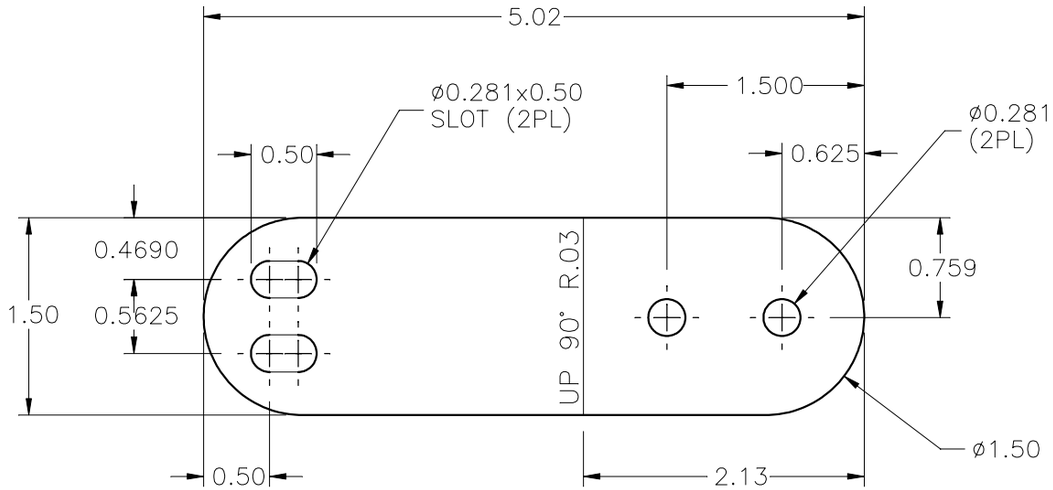

FLAT

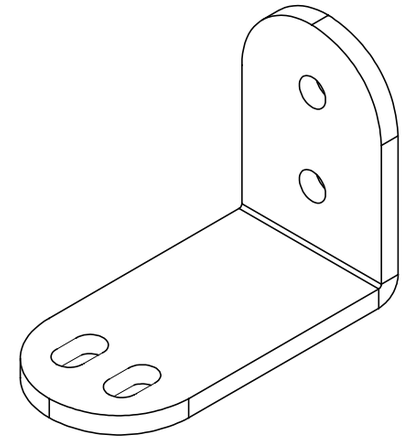

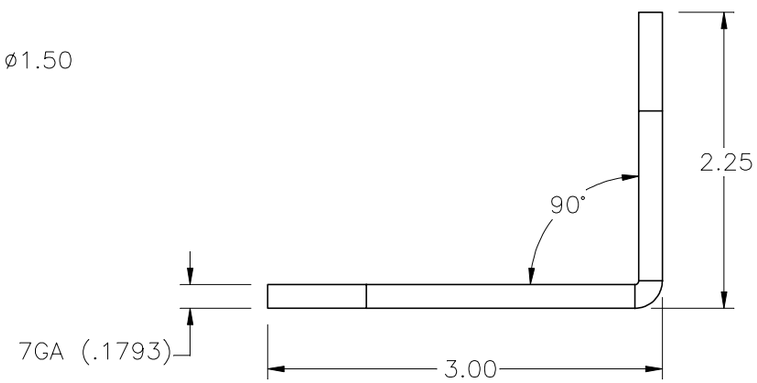

END VIEW
AFTER FORMING

NOTES:
1) 2 PER COACH
2) FLAT STEEL (7 Ga.) (.1793) BLACK POWDER COAT

NEWMAR CORP P.O. Box 30, Nappanee, IN. 46550	Model: DS DP (SEE INDEX)	Sheet 1 of 1	Drawn by: V. K.	Checked by: B. B.	Revision: REVISED TWO SLOTS FROM .281X.750 TO .281X.500 (PCR #190178)	By: V. K.
						Date: BB 1/8/18
UNITS: INCHES	Title: FOG LIGHT BRACKET	I.D. # 2019\DP\FRAME\PARTS\MISC3021	Date: 12/26/17	Date: 12/26/17	Revision: REVISED TWO .281" HOLES TO A .281"X .750" SLOTS. (PCR #190178)	By: V. K.
TITLE BLOCK: 1-2FULTB						Date: BB 1/5/18