ITEM #	QTY	NEWMAR#/VENDOR	DESCRIPTION	NEWMAR#/VENDOR
14	1	139446 (CH)	REAR ENGINE DOOR	139447 (BW)
15	1	139444 (CH)	REAR BUMPER CENTER SECTION	139445 (BW)
16	1	139442 (CH)	REAR CAP	139443 (BW)
17	1		REAR SPOILER	139449 (BW)
20	1	139916 (CH)	EXHAUST BEZEL	
21	1	143531	EXHAUST BEZEL	

(CH) – CHARLESTON
(BW) – BETTERWAY

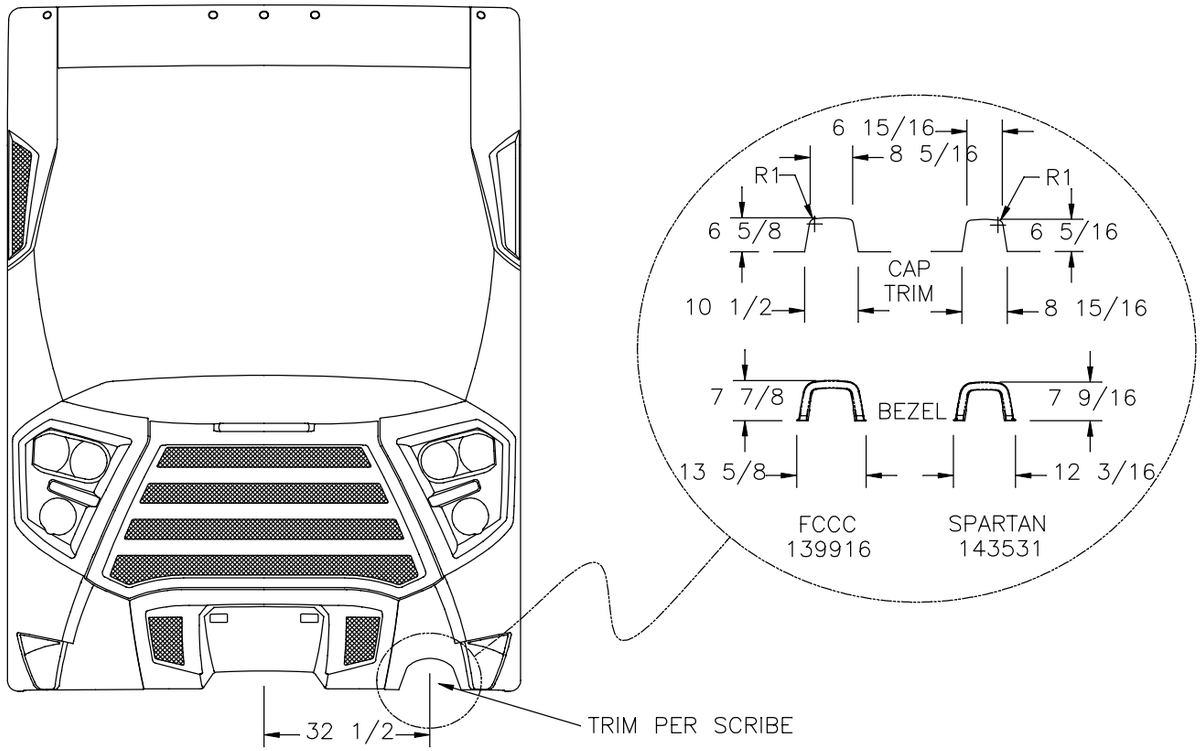

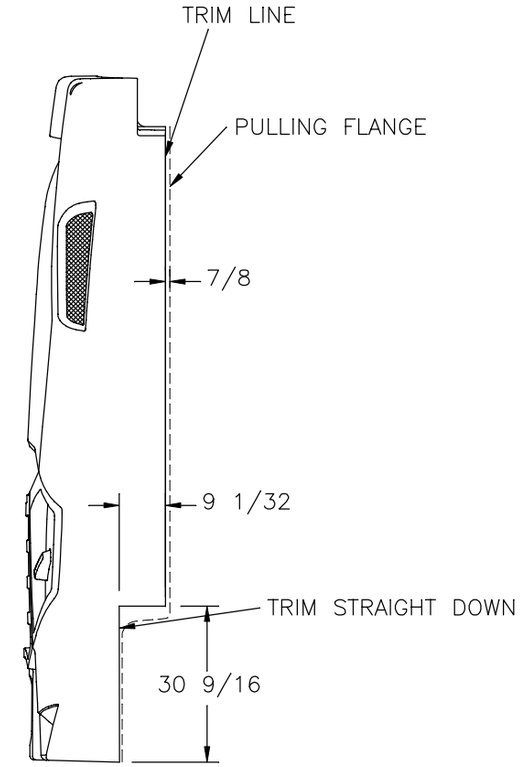

REAR CAP TRIM SECTIONS

– ALL MATERAL THICKNESS IS TO BE MINIMUM .150" & MAXIMUM .270"

► – MATERAL THICKNESS TO BE MINIMUM .150" & MAXIMUM .187" IN THE MATING FLANGE AREA (2" DEEP FROM SPECIFIED EDGES)

NOTES:
1.) HATCHED AREAS REPRESENT SECTIONS TO BE CUT OUT
2.) VIEWS ARE FROM INSIDE/FIBERGLASS SIDE OF PART

NEWMAR CORP P.O. Box 30, Nappanee, IN. 46550	Model: DS DP'S	Sheet 5 OF 5	Drawn by: V. K.	Checked by: B. B.	Revision: ADDED BEZEL DETAIL VIEW AND PART NUMBER. (ECO #242)	By: V. K. Date:BB 6/8/18
UNITS: INCHES TITLE BLOCK: 75TB	Title: CAP BACKER & TRIM	I.D. # 2019\DP\PROFILE\DS\DSDP_CAP_BCKR	Date: 10/5/17	Date: 11/30/17	Revision: ADDED BEZEL DETAIL VIEW AND PART NUMBER. (PCR #190916)	By: V. K. Date:BB 5/23/18