ITEM #	QTY	NEWMAR #	DESCRIPTION
1	2	143727	SHEET PLASTIC BLK 4X8X1" REPRO

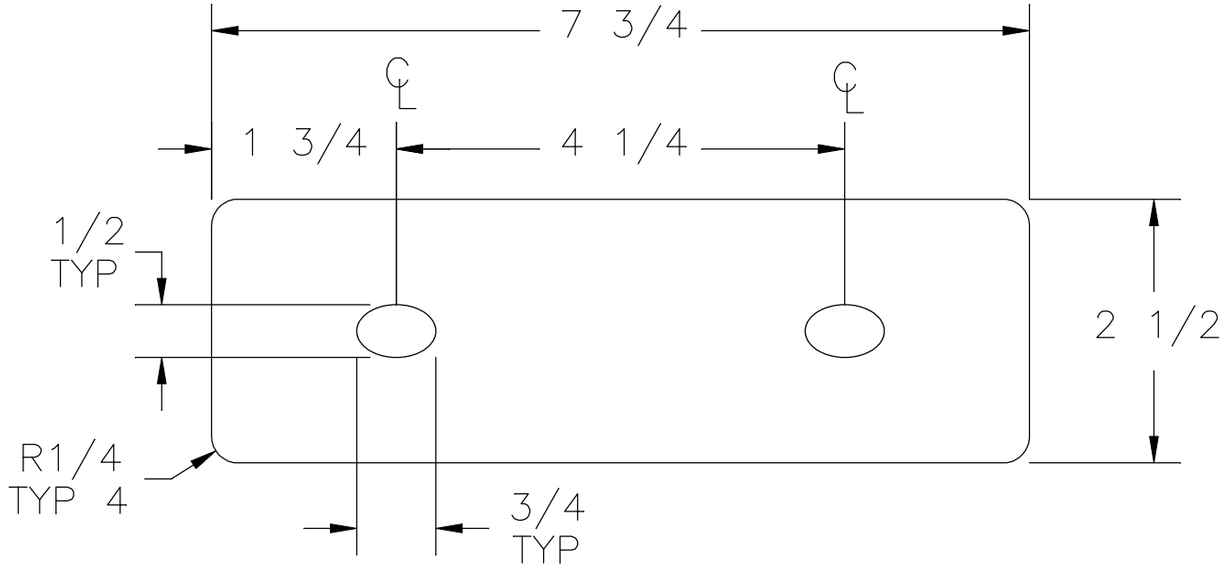

TOP VIEW

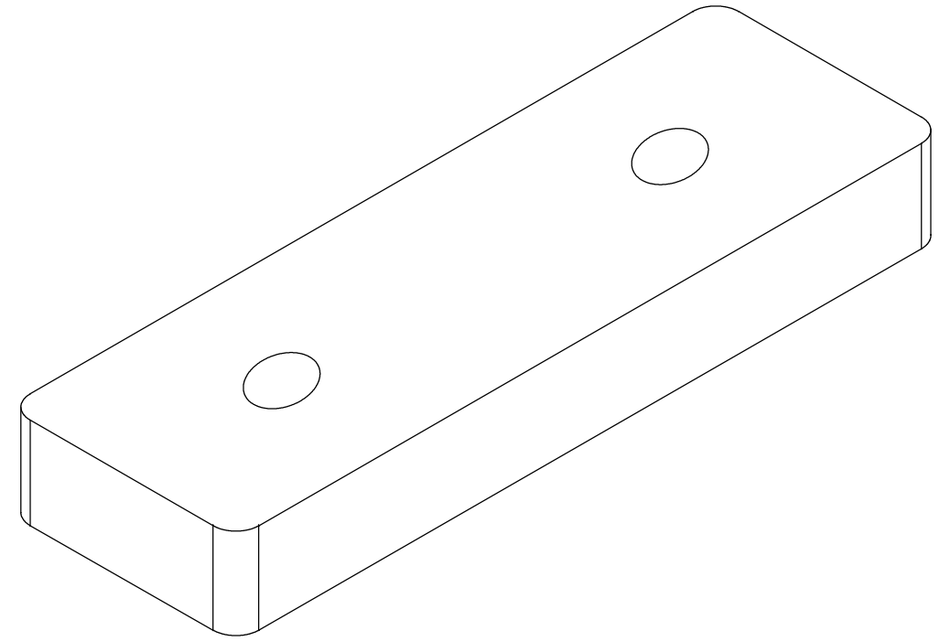

ISO VIEW

FRONT VIEW

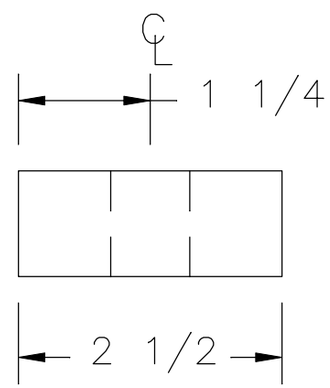

SIDE VIEW

1" ABS BLACK PLASTIC

NEWMAR CORP P.O. Box 30, Nappanee, IN. 46550	Model: CSFD 3927	Sheet 1 OF 1	Drawn by: D. S.	Checked by: D. E.	Revision: NEW PRINT FOR 2021 (ECO #764)	By: D. S.
						Date:DE 11/10/20
UNITS: INCHES	Title: RAMP BLOCK SPACER	I.D. # 2021\CA\FRAME\PARTS\RAMP_BLOCK_SPACER	Date: 10/13/20	Date: 11/10/20	Revision:	By:
TITLE BLOCK: 5TB						Date: