ITEM #	QTY	NEWMAR #	DESCRIPTION
1	1	143956	FENDER REAR DRV. W/DOOR
2	1	143957	FENDER REAR PASS.

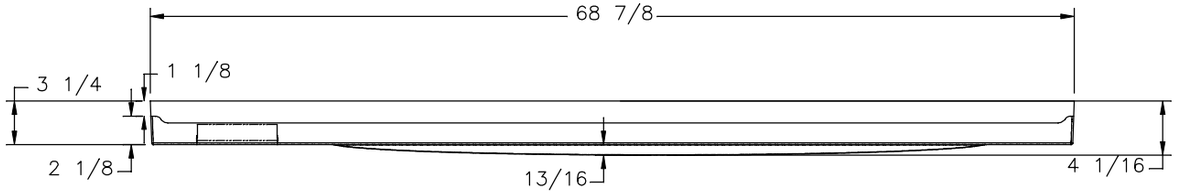

TOP VIEW

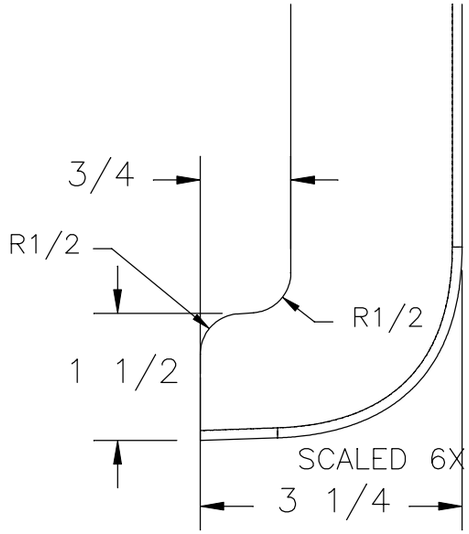

SECTION A–A

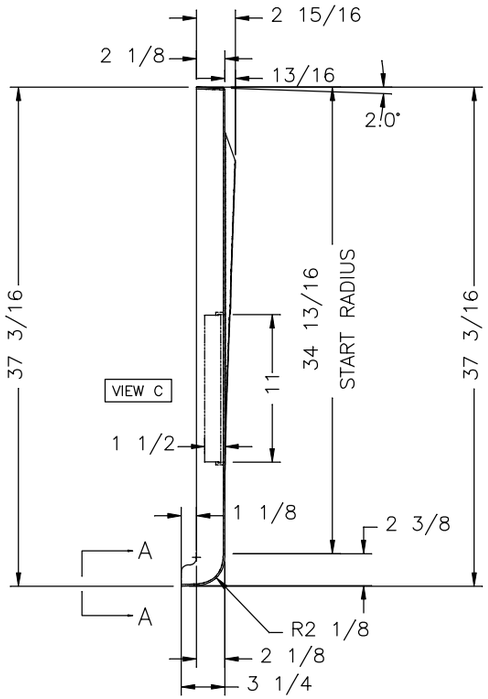

END VIEWED

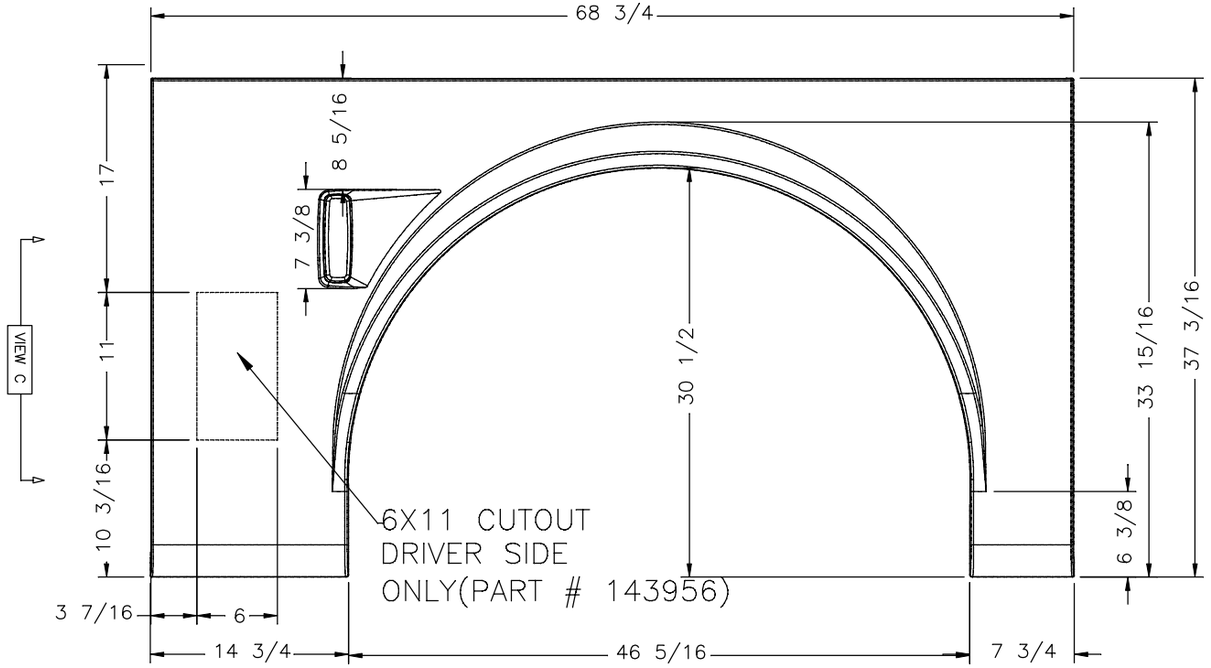

SIDE VIEW
VIEWED FROM OUTSIDE
1–PAIR REQURIED
DRIVER SIDE SHOWN 1

NOTES:
MATERIAL FIBERGLASS
MATERIAL THICKNESS IS: .1875"

NEWMAR CORP P.O. Box 30, Nappanee, IN. 46550	Model: SSCC (SEE INDEX)	Sheet 1 OF 1	Drawn by: H. Y.	Checked by: R. R.	Revision:	By:
						Date:
UNITS: INCHES	Title: FENDER REAR DRV/PASS	I.D. # 2020\CC\PROFILE\SS\FENDER_REAR_DRV_PASSS	Date: 12/13/18	Date: 12/13/18	Revision:	By:
TITLE BLOCK: 1TB						Date: